A -WING | 03/13

F.S.I. STATEMENT = WING= A

FLOOR	B.UP AREA	STAIRCASE AREA	FIRE STAIRCASE	PASSAGE AREA	NET AREA	PER.BALC.	PROP.BALC.	TENA.	LIFT & LIFT M. ROOM
L.BASEMENT	0.00	0.00	0.00	0.00	0.00	0.00	0.00	0.00	
UPP. BASEMENT	0.00	0.00	0.00	0.00	0.00	0.00	0.00	0.00	
GROUND FL.	541.58	16.28	16.28	0.0	509.02	76.35	0.00	04	
FIRST FL.	542.28	0.00	16.28	0.0	526.00	78.90	77.59	06	
SECOND FL.	617.33	0.00	16.28	0.0	601.05	90.16	75.59	08	
THIRD FL.	574.71	0.00	16.28	0.0	558.43	83.76	80.93	08	
FOURTH FL.	580.28	0.00	16.28	0.0	564.00	84.60	61.00	08	
FIFTH FL.	572.52	0.00	16.28	0.0	556.24	83.44	80.77	08	
SIXTH FL.	581.21	0.00	16.28	0.0	564.93	84.74	72.55	08	11.31
SEVENTH FL.	534.91	0.00	16.28	0.0	518.63	77.79	69.53	07	
EIGHTH FL.	580.81	0.00	16.28	0.0	564.53	84.68	61.02	08	
NINTH FL.	572.39	0.00	16.28	0.0	556.11	83.42	83.25	08	
TENTH FL.	495.24	0.00	16.28	0.0	478.96	71.84	46.28	06	
TOTAL	6193.26	16.28	179.08	0.00	5997.90	899.68	708.51	79.00	

F.S.I. STATEMENT =MHADA WING

FLOOR	B.UP AREA	STAIRCASE AREA	FIRE STAIRCASE	PASSAGE AREA	NET AREA	PER.BALC.	PROP.BALC.	TENA.	LIFT & LIFT M. ROOM
L.BASEMENT	0.00	0.00	0.00	0.00	0.00	0.00	0.00	0.00	
UPP. BASEMENT	0.00	0.00	0.00	0.00	0.00	0.00	0.00	0.00	
GROUND FL.	0.00	0.00	0.00	0.0	0.00	0.00	0.00	00	
FIRST FL.	233.25	16.28	0.00	0.0	216.97	32.55	10.73	03	
SECOND FL.	265.91	16.28	0.00	0.0	249.63	37.44	25.84	04	
THIRD FL.	265.68	16.28	0.00	0.0	249.40	37.41	34.87	04	
FOURTH FL.	265.68	16.28	0.00	0.0	249.40	37.41	25.84	04	
FIFTH FL.	265.68	16.28	0.00	0.0	249.40	37.41	34.87	04	
SIXTH FL.	265.68	16.28	0.00	0.0	249.40	37.41	37.39	04	11.31
SEVENTH FL.	265.18	16.28	0.00	0.0	248.90	37.34	34.88	04	
EIGHTH FL.	265.18	16.28	0.00	0.0	248.90	37.34	37.33	04	
NINTH FL.	265.18	16.28	0.00	0.0	248.90	37.34	34.88	04	
TENTH FL.	267.77	16.28	0.00	0.0	251.49	37.72	25.57	04	
TOTAL	2625.19	162.80	0.00	0.00	2462.39	369.36	302.20	39.00	

WATER STORAGE TANK CAP.

WATER REQ. IN O/H. TANK= 79+39 =118 NO.
118 TENA X 135 LIT X 5.0 = 79,650.00 Ltrs.
SAY = 80,000.00 Ltrs.
FOR FIRE = 20,000.00 Ltrs.
TOTAL = 1,00,000.00 Ltrs.

U/G. TANK CAP. = 80,000.00 X 1.50
TOTAL = 1,20,000.00 Ltrs.

3.10 / 5.25 / 22 — STAIRCASE AREA = 3.10 X 5.25 =16.28 SQ.M.

3.10 / 5.25 — STAIRCASE AREA = FIRE 3.10 X 5.25 =16.28 SQ.M.

LIFT AREA = 1.85 1.85 2.90 4 FIRE 2.90 — LIFT = FIRE 1.94 X 2.90 X 2 = 11.31 SQ.M.

LIFT AREA = 1.85 1.85 2.90 4 LIFT 2.90 — LIFT = 1.94 X 2.90 X 2 = 11.31 SQ.M.

PARKING AREA STATEMENT

PARKING REQUIRED	CAR	SCOOTER	CYCLE
UPTO 50.00 SQ.M. 04 TENA.	--	05	05
50.00 TO 100.00 SQ.M. 03 TENA.	01	03	03
ABOVE 100.00 SQ.M. 02 TENA.	01	02	02
PARKING PROVIDED	CAR	SCOOTER	CYCLE
UPTO 50.00 SQ.M. 00 TENA.	--	--	--
50.00 TO 100.00 SQ.M. 79 TENA.	26	79	79
ABOVE 100.00 SQ.M. -- TENA.	--	--	--
TOTAL	26	79	79

PARKING AREA STATEMENT

	AREA PROPOSED	TOTAL
CAR	26 NOS. X 20.00 SQM.	520.00 SQM.
SCOOTER	79 NOS. X 2.00 SQM.	158.00 SQM.
CYCLE	79 NOS. X 1.40 SQM.	110.60 SQM.
TOTAL		788.60 SQM.

PARKING AREA STATEMENT (MHADA)

PARKING REQUIRED	CAR	SCOOTER	CYCLE
UPTO 50.00 SQ.M. 04 TENA.	--	05	05
50.00 TO 100.00 SQ.M. 03 TENA.	01	03	03
ABOVE 100.00 SQ.M. 02 TENA.	01	02	02
PARKING PROVIDED	CAR	SCOOTER	CYCLE
UPTO 50.00 SQ.M. 39 TENA.	--	49	49
50.00 TO 100.00 SQ.M. TENA.	--	--	--
ABOVE 100.00 SQ.M. TENA.	--	--	--
TOTAL	--	49	49

PARKING AREA STATEMENT

	AREA REQUIRED	AREA PROPOSED
CAR	--- NOS. X 20.00 SQM.	---.00 SQM.
SCOOTER	49 NOS. X 2.00 SQM	98.00 SQM.
CYCLE	49 NOS. X 1.40 SQM	68.60 SQM.
TOTAL		166.60 SQM.

BALCONY AREA = (MHADA)

FIRST FLOOR
1. 1.75 X 3.30 X 1 = 5.78 SQ.M.
2. 1.50 X 3.30 X 1 = 4.95 SQ.M.

TOTAL = 10.73 SQ.M.

2nd FLOOR
1. 1.40 X 3.30 X 2 = 9.24 SQ.M.
2. 1.60 X 1.25 X 1 = 2.00 SQ.M.
3. 1.35 X 3.10 X 1 = 4.19 SQ.M.
4. 1.75 X 1.20 X 2 = 4.20 SQ.M.
5. 1.35 X 3.30 X 1 = 4.46 SQ.M.
6. 1.40 X 1.25 X 1 = 1.75 SQ.M.

TOTAL = 25.84 SQ.M.

3rd & 5th FLOOR
1. 1.65 X 3.10 X 1 = 5.12 SQ.M.
2. 1.40 X 3.30 X 2 = 9.24 SQ.M.
3. 1.60 X 1.25 X 1 = 2.00 SQ.M.
4. 1.35 X 3.10 X 1 = 4.19 SQ.M.
5. 1.75 X 1.20 X 2 = 4.20 SQ.M.
6. 1.35 X 6.20 X 1 = 8.37 SQ.M.
7. 1.40 X 1.25 X 1 = 1.75 SQ.M.

TOTAL = 34.87 SQ.M.

4th FLOOR
1. 1.40 X 3.30 X 2 = 9.24 SQ.M.
2. 1.60 X 1.25 X 1 = 2.00 SQ.M.
3. 1.35 X 3.10 X 1 = 4.19 SQ.M.
4. 1.75 X 1.20 X 2 = 4.20 SQ.M.
5. 1.35 X 3.30 X 1 = 4.46 SQ.M.
6. 1.40 X 1.25 X 1 = 1.75 SQ.M.

TOTAL = 25.84 SQ.M.

5th FLOOR
1. 1.65 X 3.10 X 1 = 5.12 SQ.M.
2. 1.40 X 3.30 X 2 = 9.24 SQ.M.
3. 1.60 X 1.25 X 1 = 2.00 SQ.M.
4. 1.35 X 3.10 X 1 = 4.19 SQ.M.
5. 1.75 X 1.20 X 2 = 4.20 SQ.M.
6. 1.35 X 6.20 X 1 = 8.37 SQ.M.
7. 1.40 X 1.25 X 1 = 1.75 SQ.M.

TOTAL = 34.87 SQ.M.

6th FLOOR
1. 1.40 X 3.30 X 2 = 9.24 SQ.M.
2. 1.60 X 1.25 X 1 = 2.00 SQ.M.
3. 1.35 X 3.10 X 1 = 4.19 SQ.M.
4. 1.75 X 3.30 X 2 = 11.55 SQ.M.
5. 1.75 X 1.20 X 2 = 4.20 SQ.M.
6. 1.35 X 6.20 X 1 = 8.37 SQ.M.
7. 1.40 X 1.25 X 1 = 1.75 SQ.M.

TOTAL = 37.39 SQ.M.

7th FLOOR
1. 1.65 X 3.10 X 1 = 5.12 SQ.M.
2. 1.40 X 3.30 X 2 = 9.24 SQ.M.
3. 1.60 X 1.25 X 1 = 2.00 SQ.M.
4. 1.35 X 3.10 X 1 = 4.19 SQ.M.
5. 1.75 X 1.20 X 2 = 4.20 SQ.M.
6. 1.35 X 3.30 X 1 = 4.46 SQ.M.
7. 1.40 X 1.26 X 1 = 1.76 SQ.M.

TOTAL = 37.33 SQ.M.

8th FLOOR
1. 1.40 X 3.30 X 2 = 9.24 SQ.M.
2. 1.60 X 1.25 X 1 = 2.00 SQ.M.
3. 1.35 X 3.10 X 1 = 4.19 SQ.M.
4. 1.74 X 3.30 X 2 = 11.48 SQ.M.
5. 1.75 X 1.20 X 2 = 4.20 SQ.M.
6. 1.35 X 3.30 X 1 = 4.46 SQ.M.
7. 1.40 X 1.26 X 1 = 1.76 SQ.M.

TOTAL = 37.33 SQ.M.

9th FLOOR
1. 1.65 X 3.10 X 1 = 5.12 SQ.M.
2. 1.40 X 3.30 X 2 = 9.24 SQ.M.
3. 1.60 X 1.25 X 1 = 2.00 SQ.M.
4. 1.35 X 3.10 X 1 = 4.19 SQ.M.
5. 1.75 X 1.20 X 2 = 4.20 SQ.M.
6. 1.35 X 6.20 X 1 = 8.37 SQ.M.
7. 1.40 X 1.26 X 1 = 1.76 SQ.M.

TOTAL = 34.88 SQ.M.

10th FLOOR
1. 1.40 X 3.30 X 2 = 9.24 SQ.M.
2. 1.60 X 1.25 X 1 = 2.00 SQ.M.
3. 1.35 X 3.10 X 1 = 4.19 SQ.M.
4. 1.75 X 3.30 X 2 = 11.55 SQ.M.
5. 1.75 X 1.20 X 2 = 4.20 SQ.M.
6. 1.35 X 6.20 X 1 = 8.37 SQ.M.
7. 1.40 X 1.26 X 1 = 1.76 SQ.M.

TOTAL = 25.57 SQ.M.

BALCONY AREA = B WING

FIRST FLOOR
1. 1.50 X 6.20 X 1 = 9.30 SQ.M.
2. 1.00 X 1.60 X 1 = 1.60 SQ.M.
3. 1.65 X 2.00 X 1 = 3.30 SQ.M.
4. 1.40 X 3.70 X 2 = 10.36 SQ.M.
5. 2.05 X 3.15 X 2 = 12.92 SQ.M.
6. 1.05 X 3.70 X 2 = 7.77 SQ.M.
7. 1.70 X 3.15 X 2 = 10.71 SQ.M.
8. 1.40 X 1.60 X 1 = 2.24 SQ.M.
9. 1.40 X 1.25 X 1 = 1.75 SQ.M.
11. 1.40 X 4.10 X 1 = 5.74 SQ.M.
10. 1.40 X 2.50 X 1 = 3.50 SQ.M.
12. 1.40 X 2.50 X 1 = 3.50 SQ.M.
13. 0.65 X 2.00 X 1 = 1.30 SQ.M.
14. 1.00 X 3.60 X 1 = 3.60 SQ.M.

TOTAL = 77.59 SQ.M.

2ND FLOOR
1. 1.40 X 1.60 X 4 = 8.96 SQ.M.
2. 1.68 X 3.35 X 1 = 5.63 SQ.M.
3. 1.75 X 3.35 X 1 = 5.86 SQ.M.
4. 1.40 X 3.30 X 1 = 4.62 SQ.M.
5. 1.75 X 3.30 X 1 = 5.78 SQ.M.
6. 1.00 X 1.45 X 1 = 1.45 SQ.M.
7. 1.75 X 1.85 X 1 = 3.24 SQ.M.
8. 1.75 X 1.20 X 2 = 4.20 SQ.M.
9. 1.60 X 1.25 X 1 = 2.00 SQ.M.
10. 1.40 X 1.24 X 1 = 1.74 SQ.M.
11. 1.50 X 6.40 X 1 = 9.60 SQ.M.
12. 1.55 X 6.41 X 1 = 9.94 SQ.M.
13. 2.05 X 3.35 X 1 = 6.87 SQ.M.
14. 1.70 X 3.35 X 1 = 5.70 SQ.M.

TOTAL = 75.59 SQ.M.

7TH FLOOR
1. 1.05 X 3.50 X 1 = 3.68 SQ.M.
2. 1.70 X 3.35 X 1 = 5.70 SQ.M.
3. 1.40 X 1.60 X 4 = 8.96 SQ.M.
4. 1.05 X 3.70 X 3 = 11.66 SQ.M.
5. 1.70 X 3.15 X 3 = 16.07 SQ.M.
6. 1.40 X 3.30 X 2 = 9.24 SQ.M.
7. 1.35 X 3.10 X 2 = 8.37 SQ.M.
8. 1.75 X 1.20 X 1 = 2.10 SQ.M.
9. 1.40 X 1.25 X 1 = 1.75 SQ.M.
10. 1.60 X 1.25 X 1 = 2.00 SQ.M.

TOTAL = 69.53 SQ.M.

3RD FLOOR
1. 1.40 X 1.60 X 2 = 4.48 SQ.M.
2. 1.05 X 3.70 X 2 = 7.77 SQ.M.
3. 1.70 X 3.15 X 2 = 10.71 SQ.M.
4. 1.40 X 3.30 X 1 = 4.62 SQ.M.
5. 1.35 X 6.20 X 1 = 8.37 SQ.M.
6. 1.75 X 1.20 X 2 = 4.20 SQ.M.
7. 1.40 X 1.24 X 1 = 1.74 SQ.M.
8. 1.40 X 1.60 X 1 = 2.24 SQ.M.
9. 1.40 X 1.59 X 1 = 2.23 SQ.M.
10. 1.60 X 1.25 X 1 = 2.00 SQ.M.
11. 1.35 X 3.10 X 1 = 4.19 SQ.M.
12. 1.40 X 3.30 X 1 = 4.62 SQ.M.
13. 1.65 X 3.11 X 1 = 5.13 SQ.M.
14. 1.05 X 3.70 X 1 = 3.89 SQ.M.
15. 1.70 X 3.15 X 1 = 5.36 SQ.M.
16. 1.70 X 3.35 X 1 = 5.70 SQ.M.
17. 1.05 X 3.50 X 1 = 3.68 SQ.M.

TOTAL = 80.93 SQ.M.

4TH FLOOR
1. 1.40 X 1.60 X 3 = 6.72 SQ.M.
2. 1.75 X 3.35 X 1 = 5.86 SQ.M.
3. 1.75 X 3.55 X 1 = 6.21 SQ.M.
4. 1.40 X 1.24 X 1 = 1.74 SQ.M.
5. 1.40 X 3.30 X 2 = 9.24 SQ.M.
6. 1.35 X 3.30 X 1 = 4.46 SQ.M.
7. 1.75 X 1.20 X 2 = 4.20 SQ.M.
8. 1.35 X 3.10 X 1 = 4.19 SQ.M.
9. 1.60 X 1.25 X 1 = 2.00 SQ.M.
10. 1.40 X 1.59 X 1 = 2.23 SQ.M.
11. 2.05 X 3.55 X 1 = 7.28 SQ.M.
12. 2.05 X 3.35 X 1 = 6.87 SQ.M.

TOTAL = 61.00 SQ.M.

8TH FLOOR
1. 1.40 X 1.60 X 4 = 8.96 SQ.M.
2. 1.75 X 3.35 X 1 = 5.86 SQ.M.
3. 1.75 X 3.55 X 1 = 6.21 SQ.M.
4. 1.40 X 1.25 X 1 = 1.75 SQ.M.
5. 1.40 X 3.30 X 2 = 9.24 SQ.M.
6. 1.35 X 3.30 X 1 = 4.46 SQ.M.
7. 1.75 X 1.20 X 2 = 4.20 SQ.M.
8. 1.35 X 3.10 X 1 = 4.19 SQ.M.
9. 1.60 X 1.25 X 1 = 2.00 SQ.M.
10. 1.40 X 1.59 X 1 = 2.23 SQ.M.
11. 2.05 X 3.55 X 1 = 7.28 SQ.M.
12. 2.05 X 3.35 X 1 = 6.87 SQ.M.

TOTAL = 61.02 SQ.M.

5TH FLOOR
1. 1.05 X 3.70 X 2 = 7.77 SQ.M.
2. 1.70 X 3.15 X 2 = 10.71 SQ.M.
3. 1.40 X 1.60 X 2 = 4.48 SQ.M.
4. 1.70 X 3.15 X 2 = 10.71 SQ.M.
5. 1.05 X 3.70 X 2 = 7.77 SQ.M.
6. 1.40 X 3.30 X 2 = 9.24 SQ.M.
7. 1.35 X 6.20 X 1 = 8.37 SQ.M.
8. 1.75 X 1.20 X 2 = 4.20 SQ.M.
9. 1.35 X 3.10 X 1 = 4.19 SQ.M.
10. 1.60 X 1.25 X 1 = 2.00 SQ.M.
11. 1.65 X 3.10 X 1 = 5.12 SQ.M.
12. 1.40 X 1.24 X 1 = 1.74 SQ.M.
13. 1.40 X 1.60 X 1 = 2.24 SQ.M.
14. 1.40 X 1.59 X 1 = 2.23 SQ.M.

TOTAL = 80.77 SQ.M.

6TH FLOOR
1. 1.40 X 1.60 X 3 = 6.72 SQ.M.
2. 1.75 X 3.55 X 1 = 6.21 SQ.M.
3. 1.75 X 3.35 X 1 = 5.86 SQ.M.
4. 1.40 X 1.24 X 1 = 1.74 SQ.M.
5. 1.40 X 3.30 X 2 = 9.24 SQ.M.
6. 1.35 X 3.30 X 1 = 4.46 SQ.M.
7. 1.75 X 3.30 X 2 = 11.55 SQ.M.
8. 1.75 X 1.20 X 2 = 4.20 SQ.M.
9. 1.60 X 1.25 X 1 = 2.00 SQ.M.
10. 1.35 X 3.10 X 1 = 4.19 SQ.M.
11. 1.40 X 1.59 X 1 = 2.23 SQ.M.
12. 2.05 X 3.35 X 1 = 6.87 SQ.M.
13. 2.05 X 3.55 X 1 = 7.28 SQ.M.

TOTAL = 72.55 SQ.M.

9TH FLOOR
1. 1.05 X 3.50 X 1 = 3.68 SQ.M.
2. 1.40 X 1.60 X 2 = 4.48 SQ.M.
3. 1.05 X 3.70 X 2 = 7.77 SQ.M.
4. 1.90 X 3.15 X 1 = 5.99 SQ.M.
5. 1.70 X 3.15 X 1 = 5.36 SQ.M.
6. 1.40 X 3.30 X 1 = 4.62 SQ.M.
7. 1.35 X 6.20 X 1 = 8.37 SQ.M.
8. 1.40 X 1.25 X 1 = 1.75 SQ.M.
9. 1.40 X 1.60 X 2 = 4.48 SQ.M.
10. 1.75 X 1.20 X 2 = 4.20 SQ.M.
11. 1.35 X 3.10 X 1 = 4.19 SQ.M.
12. 1.60 X 1.25 X 1 = 2.00 SQ.M.
13. 1.40 X 3.30 X 1 = 4.62 SQ.M.
14. 1.65 X 3.10 X 1 = 5.12 SQ.M.
15. 1.05 X 3.70 X 1 = 3.89 SQ.M.
16. 1.70 X 3.15 X 1 = 5.36 SQ.M.
17. 2.20 X 3.35 X 1 = 7.37 SQ.M.

TOTAL = 83.25 SQ.M.

10TH FLOOR
1. 1.40 X 1.60 X 4 = 8.96 SQ.M.
2. 1.25 X 3.55 X 1 = 4.44 SQ.M.
3. 1.05 X 6.85 X 2 = 14.39 SQ.M.
4. 1.40 X 3.30 X 2 = 9.24 SQ.M.
5. 1.40 X 1.25 X 1 = 1.75 SQ.M.
6. 1.60 X 1.25 X 1 = 2.00 SQ.M.
7. 1.55 X 3.55 X 1 = 5.50 SQ.M.

TOTAL = 46.28 SQ.M.

Approved as amended in ..... subject to conditions mentioned in Annexure 'A' of letter No.CVR/C.R. No.235/14 dated 09/01/17 & No./G. No./CTS No.70/56 & 63 Dated 09/09/20 23

Metropolitan Commissioner and Chief Executive Officer Pune Metropolitan Regional Development Authority, Pune.

Pune Metropolitan Regional Development Authority PMRDA

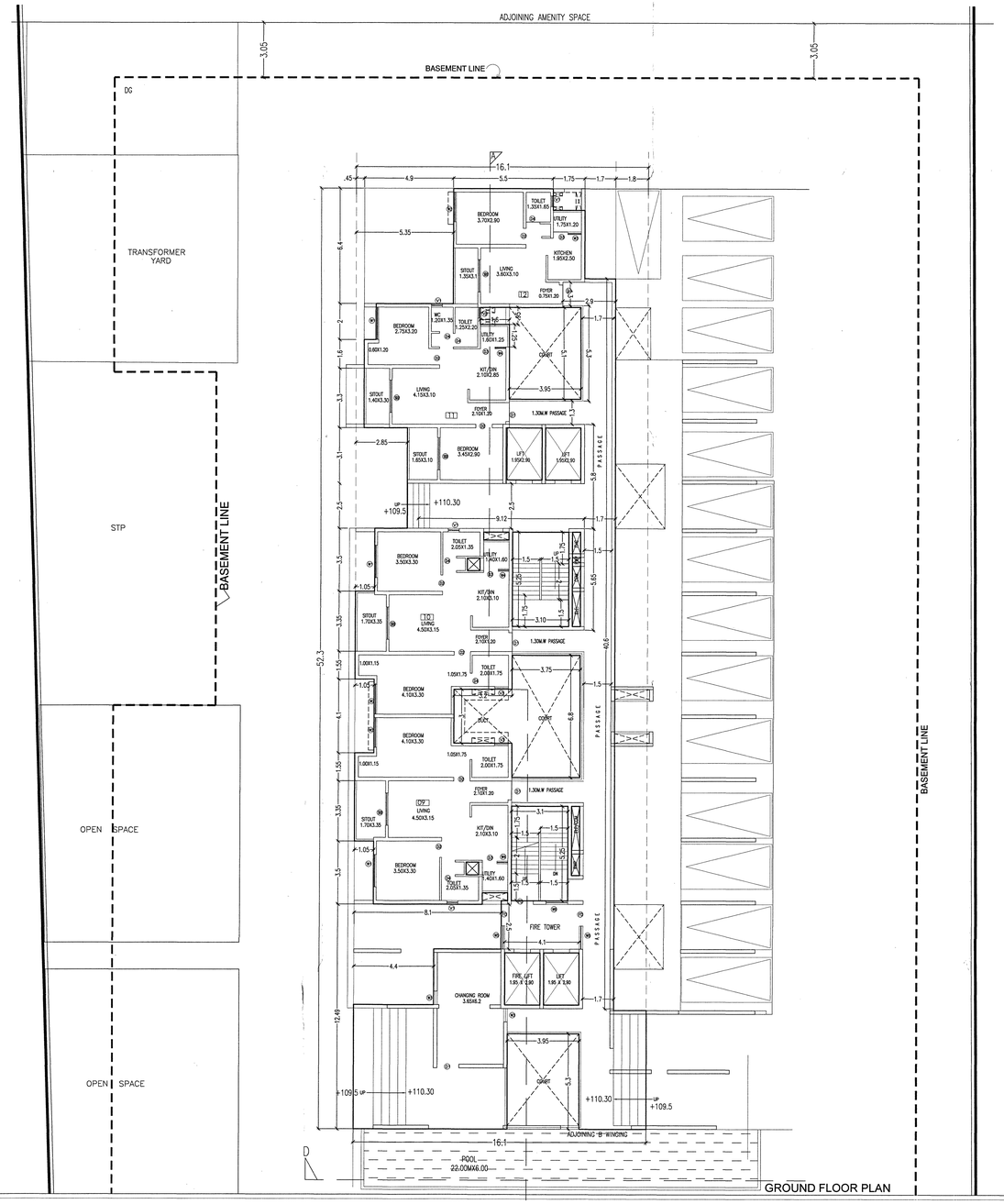

GROUND FLOOR PLAN

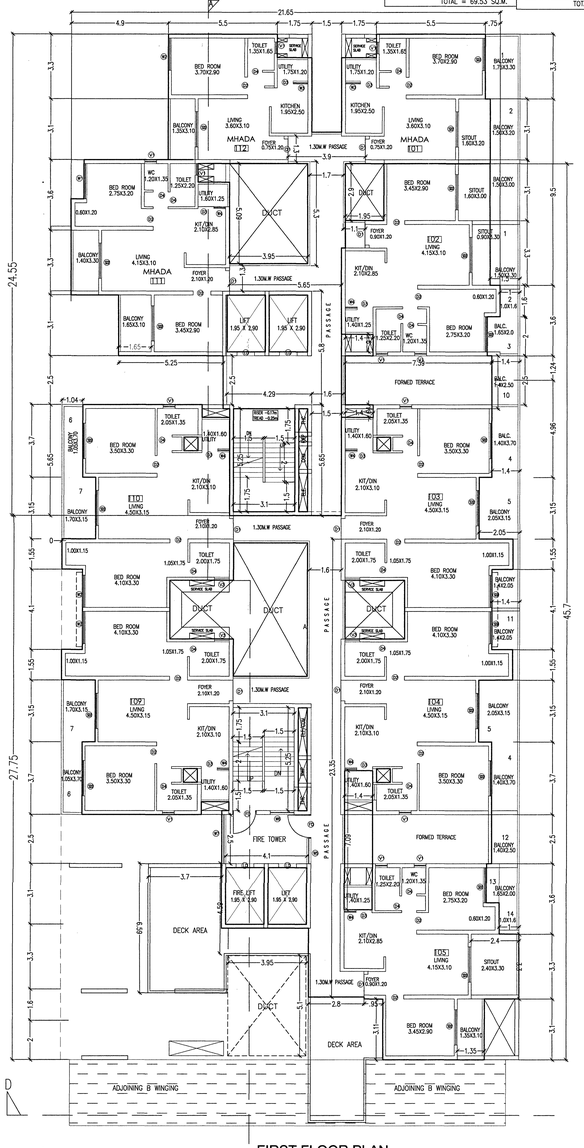

FIRST FLOOR PLAN

AREA KEY PLAN
GROUND FLOOR
AREA CALCULATIONS
A) 16.10 X 52.29 = 841.87 SQ.M.

DEDUCTIONS
1. 5.35 X 6.40 X 1 = 34.24 SQ.M.
2. 1.75 X 1.20 X 1 = 2.10 SQ.M.
3. 3.50 X 5.00 X 1 = 17.50 SQ.M.
4. 1.10 X 2.00 X 1 = 2.20 SQ.M.
5. 0.45 X 4.90 X 1 = 2.21 SQ.M.
6. 2.85 X 5.60 X 1 = 15.96 SQ.M.
7. 1.05 X 3.50 X 2 = 7.35 SQ.M.
8. 1.60 X 0.95 X 1 = 1.52 SQ.M.
9. 3.95 X 5.10 X 1 = 20.15 SQ.M.
10. 1.95 X 2.90 X 4 = 22.62 SQ.M.
11. 1.40 X 0.45 X 1 = 0.63 SQ.M.
12. 0.70 X 0.60 X 2 = 0.84 SQ.M.
13. 0.45 X 5.25 X 2 = 4.73 SQ.M.
14. 3.75 X 6.80 X 1 = 25.50 SQ.M.
15. 3.20 X 3.00 X 1 = 9.60 SQ.M.
16. 1.05 X 4.10 X 1 = 4.31 SQ.M.
17. 0.35 X 0.44 X 1 = 0.15 SQ.M.
18. 1.05 X 0.64 X 1 = 0.67 SQ.M.
19. 8.10 X 2.49 X 1 = 20.17 SQ.M.
20. 4.40 X 3.10 X 1 = 13.64 SQ.M.
21. 3.95 X 5.30 X 1 = 20.94 SQ.M.
22. 1.80 X 40.70 X 1 = 73.26 SQ.M.

TOTAL = 300.29 SQ.M.

NET AREA 841.87–300.29 = 541.58 SQ.M.

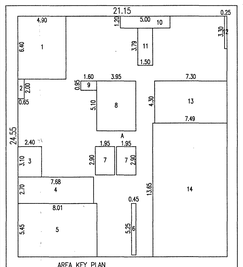

AREA KEY PLAN
FIRST FLOOR = MHADA
AREA CALCULATIONS
A) 21.15 X 24.55 = 519.23 SQ.M.
DEDUCTIONS
1. 4.90 X 6.40 X 1 = 31.36 SQ.M.
2. 0.65 X 2.00 X 1 = 1.30 SQ.M.
3. 2.40 X 3.10 X 1 = 7.44 SQ.M.
4. 7.68 X 2.70 X 1 = 20.74 SQ.M.
5. 8.01 X 5.45 X 1 = 43.65 SQ.M.
6. 0.45 X 5.25 X 1 = 2.36 SQ.M.
7. 1.95 X 2.90 X 2 = 11.31 SQ.M.
8. 3.95 X 5.10 X 1 = 20.15 SQ.M.
9. 1.60 X 0.95 X 1 = 1.52 SQ.M.
10. 5.00 X 1.20 X 1 = 6.00 SQ.M.
11. 1.50 X 3.79 X 1 = 5.69 SQ.M.
12. 0.25 X 3.30 X 1 = 0.83 SQ.M.
13. 7.30 X 4.30 X 1 = 31.39 SQ.M.
14. 7.49 X 13.65 X 1 = 102.24 SQ.M.

TOTAL = 285.98 SQ.M.

NET AREA 519.23–285.98 = 233.25 SQ.M.

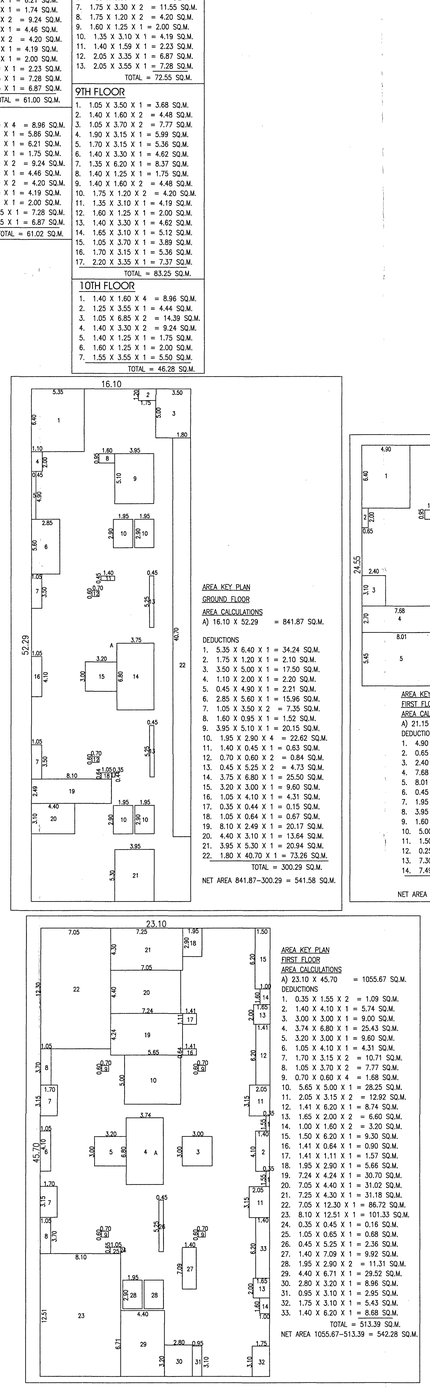

AREA KEY PLAN
FIRST FLOOR
AREA CALCULATIONS
A) 23.10 X 45.70 = 1055.67 SQ.M.
DEDUCTIONS
1. 0.35 X 1.55 X 2 = 1.09 SQ.M.
2. 1.40 X 4.10 X 1 = 5.74 SQ.M.
3. 3.00 X 3.00 X 1 = 9.00 SQ.M.
4. 3.74 X 6.80 X 1 = 25.43 SQ.M.
5. 3.20 X 3.00 X 1 = 9.60 SQ.M.
6. 1.05 X 4.10 X 1 = 4.31 SQ.M.
7. 1.70 X 3.15 X 2 = 10.71 SQ.M.
8. 1.05 X 3.70 X 2 = 7.77 SQ.M.
9. 0.70 X 0.60 X 4 = 1.68 SQ.M.
10. 5.65 X 5.00 X 1 = 28.25 SQ.M.
11. 2.05 X 3.15 X 2 = 12.92 SQ.M.
12. 1.41 X 6.20 X 1 = 8.74 SQ.M.
13. 1.65 X 2.00 X 2 = 6.60 SQ.M.
14. 1.00 X 1.60 X 2 = 3.20 SQ.M.
15. 1.50 X 6.20 X 1 = 9.30 SQ.M.
16. 1.41 X 0.64 X 1 = 0.90 SQ.M.
17. 1.41 X 1.11 X 1 = 1.57 SQ.M.
18. 1.95 X 2.90 X 1 = 5.66 SQ.M.
19. 7.24 X 4.24 X 1 = 30.70 SQ.M.
20. 7.05 X 4.40 X 1 = 31.02 SQ.M.
21. 7.25 X 4.30 X 1 = 31.18 SQ.M.
22. 7.05 X 12.30 X 1 = 86.72 SQ.M.
23. 8.10 X 12.51 X 1 = 101.33 SQ.M.
24. 0.35 X 0.45 X 1 = 0.16 SQ.M.
25. 1.05 X 0.65 X 1 = 0.68 SQ.M.
26. 0.45 X 5.25 X 1 = 2.36 SQ.M.
27. 1.40 X 7.09 X 1 = 9.92 SQ.M.
28. 1.95 X 2.90 X 2 = 11.31 SQ.M.
29. 4.40 X 6.71 X 1 = 29.52 SQ.M.
30. 2.80 X 3.20 X 1 = 8.96 SQ.M.
31. 0.95 X 3.10 X 1 = 2.95 SQ.M.
32. 1.75 X 3.10 X 1 = 5.43 SQ.M.
33. 1.40 X 6.20 X 1 = 8.68 SQ.M.

TOTAL = 513.39 SQ.M.

NET AREA 1055.67–513.39 = 542.28 SQ.M.

D–W OPENING SCHEDULE

Nos.	Width	Height
D1	1050	2250
D2	900	2250
D3	800	2250
D4	750	2250
SD2	2000	2250
SD3	1650	2250
W1	1800	1500
W2	1650	1500
W3	750	1100
W4	600	1100
V1	600	900
V3	750	1050
FD	1200	2250
LD	900	2250
W5	1300	1150
W6	1200	1150
W7	2500	1150

ARCHITECT	OWNER (P.A.H.)
Ar. PRAKASH KULKARNI CA/98/22909	MR. ASHWIN SUHAS LUNKAD. M/s. ROHAN HOUSING PVT.LTD.,

PROJECT:
PROPOSED REVISED LAYOUT OF RESIDENTIAL BUILDING ON, OLD GAT.NO.1460(P),WAGHOLI, TAL -HAVELI ,DIST - PUNE.

ARCHITECT
PRAKASH KULKARNI
ankur associates ARCHITECTS
TELONAKAYA, OFF. NO.- 101, 1ST FL., CTS. NO.-1187/10, GHOLE ROAD, SHIVAJINAGAR, PUNE - 411 005. PHONE - 25514790, 25514791 / FAX - 020 25514792
Email : prakash@ankurassociates.in

DATE	SCALE	DRN BY	
02/01/2023	1 : 100	Patilsvl	----

E:\PROJECT\Ashwin bulder\pune\wagholi\G.GAT NO.1460\MD\REV.1\2.1.2022\BASIC F.S.I\2 Backup.dwg