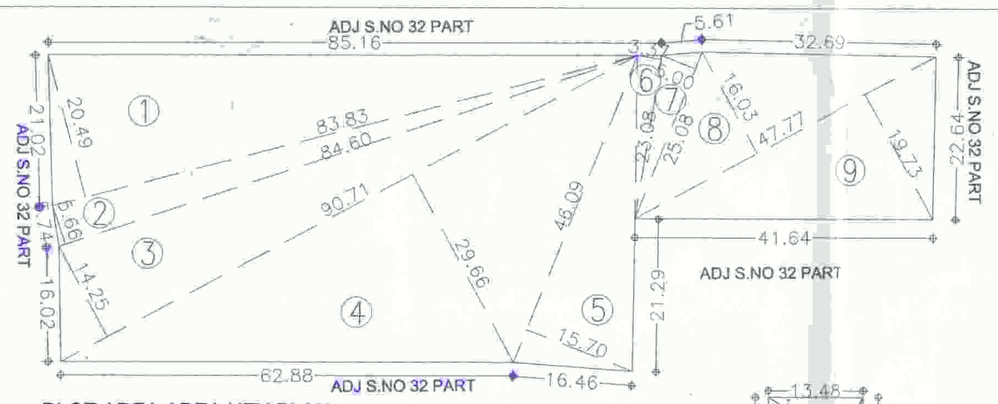

PLOT AREA AREA KEY PLAN
(Scale - 1:500)

Area Calculation For Plot							
1	83.83	X	20.49	X	0.5	=	858.84
2	84.60	X	5.66	X	0.5	=	239.42
3	90.71	X	14.25	X	0.5	=	646.31
4	90.71	X	29.66	X	0.5	=	1345.23
5	46.09	X	15.70	X	0.5	=	361.81
6	23.08	X	3.37	X	0.5	=	38.89
7	25.08	X	5.00	X	0.5	=	62.70
8	47.77	X	16.03	X	0.5	=	382.88
9	47.77	X	19.73	X	0.5	=	471.25
TOTAL							4407.32

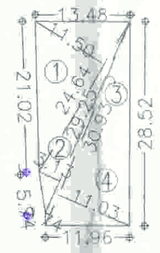

OPEN SPACE AREA
KEY PLAN

Open Space Area Calculation							
1	24.64	X	11.50	X	0.5	=	141.68
2	29.25	X	3.13	X	0.5	=	45.78
3	30.93	X	0.74	X	0.5	=	11.44
4	30.93	X	11.02	X	0.5	=	170.40
TOTAL							369.30

PLOT-2
AREA KEY PLAN

PLOT -2							
1	2.42	X	18.10	X	0.5	=	21.90
TOTAL							21.90

WATER AREA CALCULATION			
FOR RESIDENTIAL:			
AMOUNT OF WATER REQUIRED PER PERSON	=	135.00	lts/day
WATER REQUIRED PER FLAT(5 PERSONS/FLAT)	=	675.00	lts/day
NO OF FLATS IN BLDG.	=	104.00	NOS.
REQUIRED CAPACITY OF OVERHEAD WATER TANK	=	70200.00	lts/day
WATER REQUIRED FOR FIRE FIGHTING	=	20000.00	lts/day
TOTAL WATER REQUIRED FOR OHWT	=	90200.00	lts/day
PROVIDE CAPACITY TO OVER HEAD WATER TANK	=	90200.00	lts/day
REQUIRED CAPACITY TO UNDER GROUND WATER TANK WATER REQ.X1.50	=	135300.00	lts/day

TOTAL F.S.I. STATEMENT FOR PREMIUM (IN SQ.M)

WING	NET B/UP AREA		PROP. OPEN BALCONY	AREA OF STAIRCASE	TERRACE AREA	LIFT AREA	FIRE LIFT AREA	TENE'TS
	Comm	Resi						
WING B	0.00	3195.44	400.92	226.80	0.00	4.56	4.56	52
WING C	0.00	3921.80	267.61	491.40	181.22	4.56	4.56	52
TOTAL	**0.00**	**7117.24**	**668.53**	**718.20**	**181.22**	**9.12**	**9.12**	**104.00**
	7117.24							

F.S.I. STATEMENT (Wing C) (B+P+13 FLOORS)

NO FL.	NET B/UP AREA	PERM. BALCONY (15%)	PROP. OPEN BALCONY	LIFT	FIRE LIFT	PROP. TEN.	TERR. AREA	STAIR CASE AREA
B	--	--	--			--	--	--
Par.	--	--	--			--	--	--
1st	302.85	45.43	20.62			4	14.30	37.80
2nd	302.85	45.43	20.62			4	13.52	37.80
3rd	302.85	45.43	20.62			4	14.30	37.80
4th	302.85	45.43	20.62			4	13.52	37.80
5th	302.85	45.43	20.62			4	14.30	37.80
6th	302.85	45.43	20.62			4	13.52	37.80
7th	302.85	45.43	20.62			4	14.30	37.80
8th	302.85	45.43	20.62			4	13.52	37.80
9th	302.85	45.43	20.62			4	14.30	37.80
10th	302.85	45.43	20.62			4	13.52	37.80
11th	302.85	45.43	20.62			4	14.30	37.80
12th	287.60	43.14	20.17			4	13.52	37.80
13th	302.85	45.43	20.62			4	14.30	37.80
TOTAL	3921.80	588.27	267.61	4.56	4.56	52.00	181.22	491.40

F.S.I. STATEMENT (Wing B) (B+P+13 FLOORS)

NO FL.	NET B/UP AREA	PERM. BALCONY (15%)	PROP. OPEN BALCONY	LIFT	FIRE LIFT	PROP. TEN.	TERR. AREA	STAIR CASE AREA
B	--	--	--			--	--	--
Par.	--	--	--			--	--	--
1st	246.79	37.02	30.84			4	--	37.80
2nd	246.79	37.02	30.84			4	--	37.80
3rd	246.79	37.02	30.84			4	--	37.80
4th	246.79	37.02	30.84			4	--	37.80
5th	246.79	37.02	30.84			4	--	37.80
6th	246.79	37.02	30.84			4	--	37.80
7th	246.79	37.02	30.84			4	--	37.80
8th	233.96	35.09	30.84			4	--	37.80
9th	246.79	37.02	30.84			4	--	37.80
10th	246.79	37.02	30.84			4	--	37.80
11th	246.79	37.02	30.84			4	--	37.80
12th	246.79	37.02	30.84			4	--	37.80
13th	246.79	37.02	30.84			4	--	37.80
TOTAL	3195.44	479.32	400.92	4.56	4.56	24.00	--	226.80

जमिन विकास निधी 3974.56 चौ.मी क्षेत्रासाठी
एकूण रु. 1016934/- चलन क्र. CE/BP/3726/19
दि. 8/8/2019 ने भरले आहेत.

For the purpose of proper circulation of road pattern and to have a continuity of the water & drainage system and other services for the development of adjacent lands, the P.M.C. reserves the right to permit access and extension of the internal roads & Services through this lans under layout/sub division.

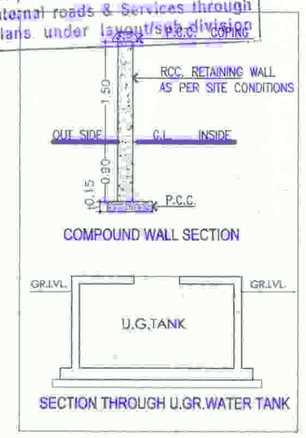

LOCATION PLAN

TOTAL PARKING AREA STATEMENT

TYPE OF FLAT	NO OF FLAT	REQUIRED PARKING		
		CAR	SCOOTER	CYCLE
2 TENEMENTS HAVING BUILT-UP AREA 40.00-80.00 SQ.M. (2-4=2)	104	104	208	208
TOTAL	104	104	208	208
5% VISITOR PARKING	0	5	10	10
TOTAL	104	109	218	218

TOTAL PARKING AREA STATEMENT

VEHICLE	SIZE	VEHICLE AREA REQUIRED	VEHICLE NO	AREA PROVIDED
CARS	2.5X5.00	12.50	109	1362.50
SCOOTERS	1.00X2.00	2.00	218	436.00
CYCLE	0.50X1.40	0.70	218	152.60
TOTAL				1951.10

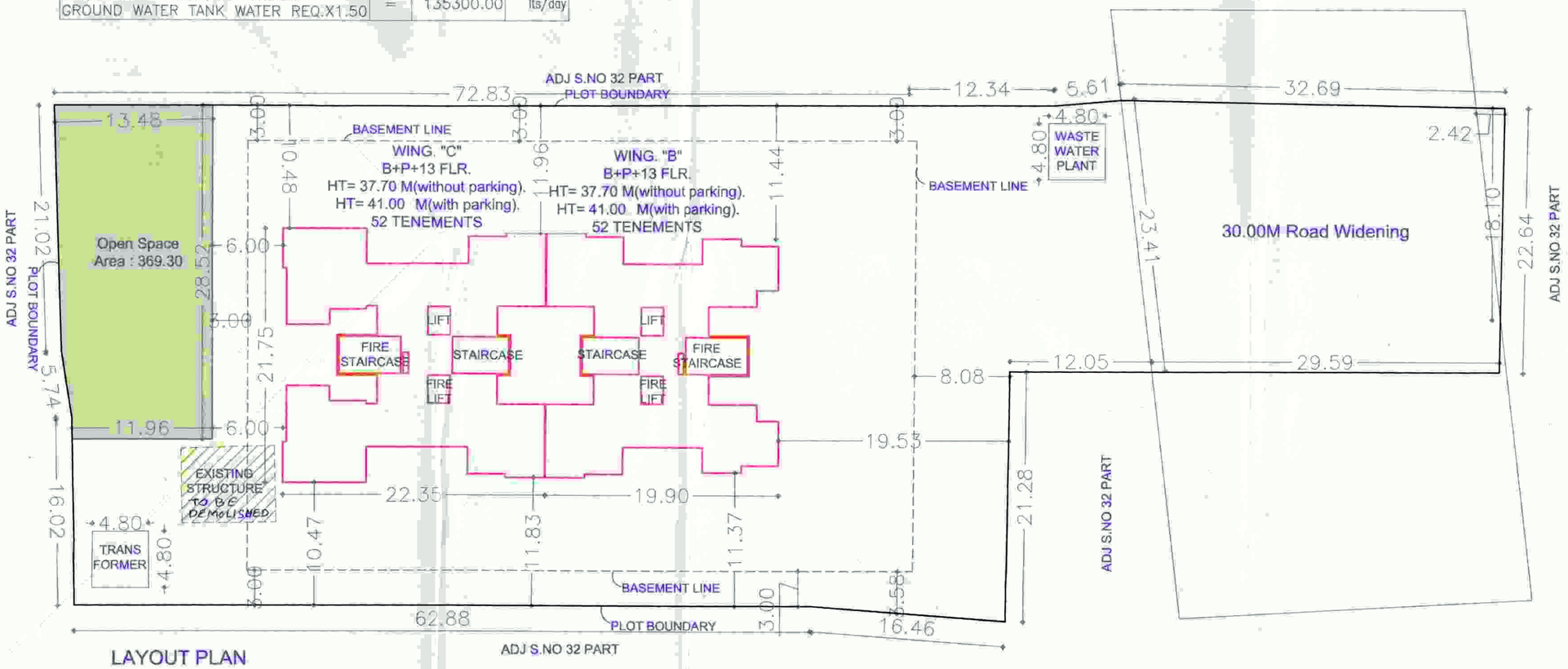

LAYOUT PLAN

Road Widening Area Calculation							
1	2.00	X	23.41	X	0.5	=	23.41
2	35.72	X	18.35	X	0.5	=	327.73
3	35.72	X	15.34	X	0.5	=	273.97
4	30.02	X	4.48	X	0.5	=	67.24
TOTAL							692.36

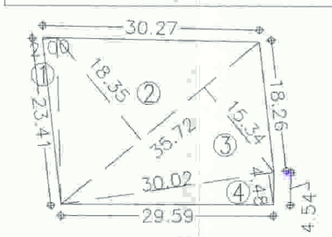

ROAD WIDENING AREA KEY PLAN
SCALE - 1:200

DATE & STAMP OF APPROVAL

1/2

बांधकाम विकास विभाग झोन क्र.
मुख्य नेआकद / एकत्रिकरण / विभागणी /
पर्जन्य नेआकद क्र.....
स.न. क्र. 66/19 61/19 दिनांक 9/8/2019
कार्यकारी अभियंता
बांधकाम विकास विभाग
झोन क्र. 2 पुणे महानगरपालिका

POONA MUNICIPAL CORPORATION BUILDING CONTROL DEPARTMENT APPROVED POONA

A AREA STATEMENT

			SQ.M.
01	Area of Plot (As per 7/12 Extract)		4535.00
02	Area of Plot (As per Demarcation)		4407.32
03	Area of Plot (Minimum Area Considered)		4407.32
04	Deductions for:		
	(a) Road Widening Area		692.36
	(b) Proposed Road		-
	(c) Any Reservation		-
	Total (a + b + c)		692.36
05	Net GROSS Area of the plot (03 - 04)		3714.96
	(a) Plot no.	PLOT-02	PLOT-01
	(b) Plot Area	21.90	3693.06
06	Deductions for:		
	(a) required Open Space (10%)		369.30
	(b) required Amenity Space (15%)		0.00
	(c) Internal Road		-
07	Net Area of the Plot (05 - 06b)		3693.06
08	Basic FSI (3693.06) X 1.10		4062.36
09	Premium FSI (3693.06 X 0.50)		1846.53
10	TDR (3693.06 X 1.40)		5170.28
11	Total Permissible area AS PER 30M DP. (3693.06 X 3) = 11079.17		11079.17
12	Existing B/up Area		0.00
13	Residential B/up Area		7117.24
14	Commercial B/up Area		0.00
15	Total BUILT-UP Area (12 + 13 + 14)		7117.24
16	F.A.R. Consumed		0.64

B TENEMENT STATEMENT

01	NET AREA of Plot (Item 07 above)	3714.96
02	Less Non-Residential Area (Shops etc.)	00.00
03	Area for Tenements (01 - 02)	3714.96
04	Tenements Permissible (250/H)	93
05	Tenements PROPOSED	60

C PARKING STATEMENT

		Cars	Motorcycles	Cycles
01	Parking required by rule	109	118	118
02	Parking provided	109	118	118
03	Garages permissible	000	000	000
04	Garages provided	000	000	000

D CERTIFICATE OF AREA

Certified that the Plot under reference was surveyed by me on and the dimensions of sides etc. of the plot stated on Plan are as measured on site and the area so worked out tallies with the area stated in document of ownership / T.P. Scheme / Records / Land Record Dept. / City Survey records.

Sign of the Architect

E LEGEND

Plot Boundary : Black	Water line : Black Dotted
Proposed Work : Red	Existing to be retained: Hatched
Drainage Line: Red Dotted	Demolitions: Yellow hatched

F OWNERS' DETAILS

Owner(s)' Name
M/s. Royal Namoville Ventures (AOP) Through its Partner
M/s. Vasturachana LLP Through its Partner Mr. Prafulla Ikhankar & Others

Owner(s)' sign:

Council of Architecture reg. no:
Vishwas Kulkarni : CA/84/8465
Hrishikesh Kulkarni : CA/2002/29235

VK:a architecture
Regd: M/s Vishwas Kulkarni
Reg no: MPA 48264
73/2 Bhaiki Marg
Off Law College Road
Pune 411 004
t +91 20 66286688
f +91 20 66286601
e mail@vkarch.com
w www.vkarch.com

Client Company & Name: M/s. Royal Namoville Ventures
Job Title: Proposed Residential Building Sr.No.32/2P,32/2/2,32/2/3,32/2/4, 32/2/5,32/2/6,32/2/7,32/2/8, 32/2/12 & 32/2/13 Balewadi, Pune
Drawing Title: Layout of Building Plan
Scale: 1:300 A1@
Drawn by: Ravikiran
Checked by: RP
Date: 14/06/19
Job no.: 1683
Drawing no.: 210
Revision: -
Status: PMC SUBMISSION