RS – ADDITIONAL F.S.I FUNGIBLE PROP. (05-08-21)

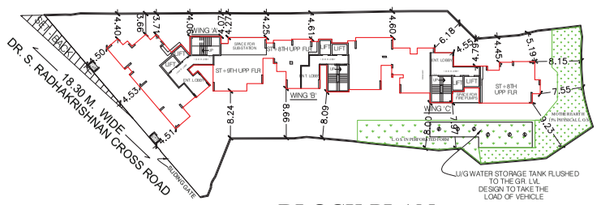

BLOCK PLAN
SCALE:– 1:500

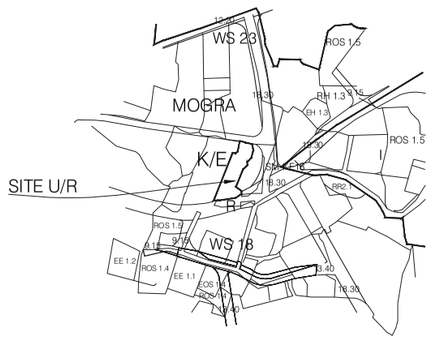

LOCATION PLAN
SCALE:– 1:4000

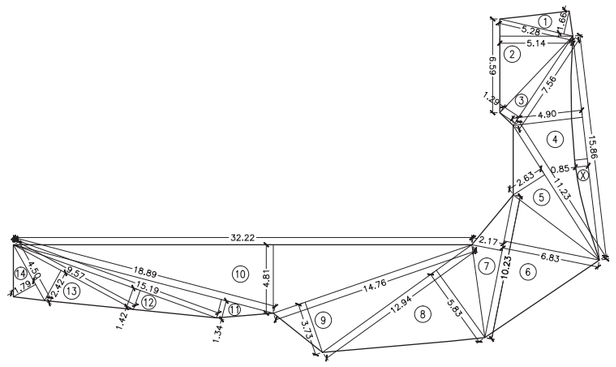

15% PHYSICAL L.O.S. AREA DIAGRAM
SCALE:– 1:200

15% L.O.S. AREA CALCULATION

1	1/2	X	5.28	X	1.66	X 1NO	=	4.38	SQ.MT.
2	1/2	X	6.59	X	5.14	X 1NO	=	16.94	SQ.MT.
3	1/2	X	7.56	X	1.29	X 1NO	=	4.88	SQ.MT.
4	1/2	X	15.86	X	4.90	X 1NO	=	38.86	SQ.MT.
5	1/2	X	11.23	X	2.63	X 1NO	=	14.77	SQ.MT.
6	1/2	X	10.23	X	6.83	X 1NO	=	34.94	SQ.MT.
7	1/2	X	10.23	X	2.17	X 1NO	=	11.10	SQ.MT.
8	1/2	X	12.94	X	5.83	X 1NO	=	37.72	SQ.MT.
9	1/2	X	14.76	X	3.73	X 1NO	=	27.53	SQ.MT.
10	1/2	X	32.22	X	4.81	X 1NO	=	77.49	SQ.MT.
11	1/2	X	18.89	X	1.34	X 1NO	=	12.66	SQ.MT.
12	1/2	X	15.19	X	1.42	X 1NO	=	10.78	SQ.MT.
13	1/2	X	9.57	X	2.42	X 1NO	=	11.58	SQ.MT.
14	1/2	X	4.50	X	1.79	X 1NO	=	4.03	SQ.MT.
						TOTAL ADDITION	=	307.66	SQ.MT.

DEDUCTIONS

X	2/3	X	15.86	X	0.85	X 1NO	=	8.99	SQ.MT.
						TOTAL DEDUCTION	=	8.99	SQ.MT.
TOTAL PROPOSED 15% L.O.S. AREA							=	298.67	SQ.MT.
TOTAL REQUIRED 15% R.G. AREA (1985.34 X 15%)							=	297.80	SQ.MT.

SUMMARY

FLOOR	BUILT–UP AREA
STILT	–
1ST	435.69 sq.mts.
2ND	578.93 sq.mts.
3RD	578.93 sq.mts. = 2751.41 SQ.MTS.
4TH	578.93 sq.mts.
5TH	578.93 sq.mts.
6TH	578.93 sq.mts.
7TH	529.18 sq.mts.
8TH	578.93 sq.mts. = 1953.08 SQ.MTS.
9TH	249.42 sq.mts.
EXCESS REFUGE AREA @ 7TH FLR	16.62 sq.mts.
EXCESS FITNESS CENTER AREA @ 1ST FLR	32.84 sq.mts.
TOTAL	4737.33 sq.mts.

*STAIRCASE, LIFT & LIFT–LOBBY AREA COUNTED IN F.S.I

CARPET AREA STATEMENT AS PER RERA

FLOOR	FLAT NO.	WING 'A'	WING 'B'	WING 'C'
STILT FLR.	–	–	–	–
1ST FLR.	1	45.79 SQ.MTS.	–	45.61 SQ.MTS.
	2	71.00 SQ.MTS.	55.05 SQ.MTS.	60.84 SQ.MTS.
	3	–	–	–
	4	–	–	–
TYPICAL FLR. 2ND TO 6TH & 8TH	1	45.79 SQ.MTS.	60.94 SQ.MTS.	45.61 SQ.MTS.
	2	71.00 SQ.MTS.	55.05 SQ.MTS.	60.84 SQ.MTS.
	3	71.36 SQ.MTS.	–	–
7TH FLR.	1	–	60.94 SQ.MTS.	45.61 SQ.MTS.
	2	71.00 SQ.MTS.	55.05 SQ.MTS.	60.84 SQ.MTS.
	3	71.36 SQ.MTS.	–	–
9TH FLR	1	45.79 SQ.MTS.	–	–
	2	71.00 SQ.MTS.	–	–
	3	71.36 SQ.MTS.	–	–

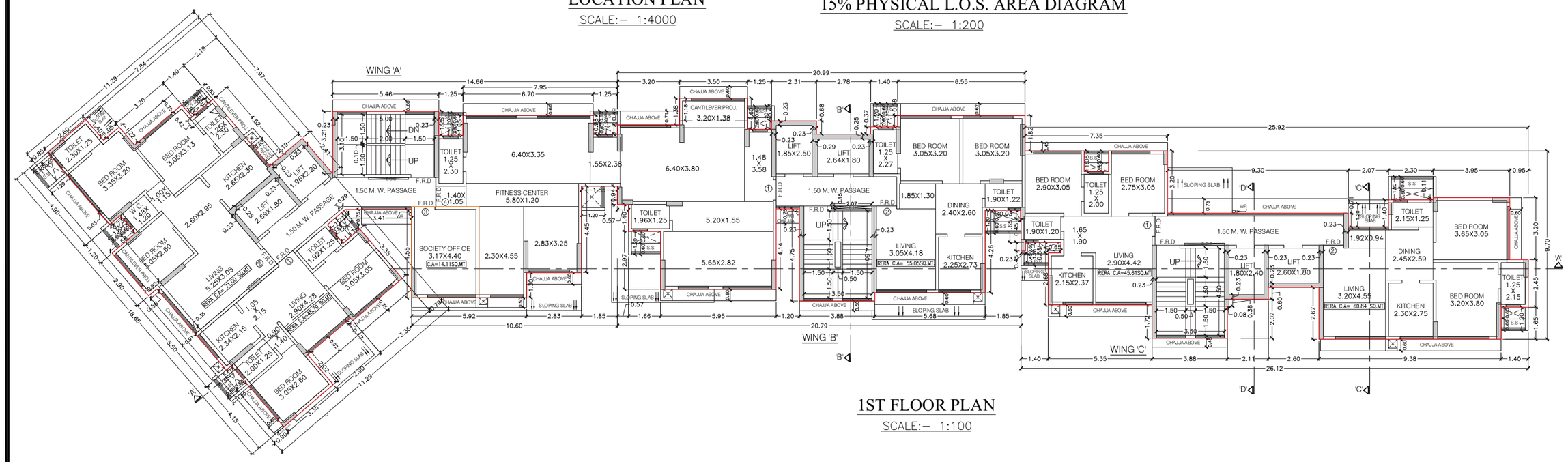

1ST FLOOR PLAN
SCALE:– 1:100

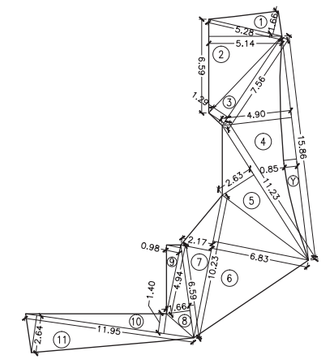

MOTHER EARTH L.O.S. AREA DIAGRAM
SCALE:– 1:200

MOTHER EARTH L.O.S. AREA CALCULATION

1	1/2	X	5.28	X	1.66	X 1NO	=	4.38	SQ.MT.
2	1/2	X	6.59	X	5.14	X 1NO	=	16.94	SQ.MT.
3	1/2	X	7.56	X	1.29	X 1NO	=	4.88	SQ.MT.
4	1/2	X	15.86	X	4.90	X 1NO	=	38.86	SQ.MT.
5	1/2	X	11.23	X	2.63	X 1NO	=	14.77	SQ.MT.
6	1/2	X	10.23	X	6.83	X 1NO	=	34.94	SQ.MT.
7	1/2	X	10.23	X	2.17	X 1NO	=	11.10	SQ.MT.
8	1/2	X	6.59	X	1.66	X 1NO	=	5.47	SQ.MT.
9	1/2	X	4.94	X	0.98	X 1NO	=	2.42	SQ.MT.
10	1/2	X	11.95	X	1.40	X 1NO	=	8.36	SQ.MT.
11	1/2	X	11.95	X	2.64	X 1NO	=	15.77	SQ.MT.
						TOTAL ADDITION	=	157.89	SQ.MT.

DEDUCTIONS

Y	2/3	X	15.86	X	0.85	X 1NO	=	8.99	SQ.MT.
						TOTAL DEDUCTION	=	8.99	SQ.MT.
TOTAL PROPOSED MOTHER EARTH L.O.S. AREA							=	148.90	SQ.MT.
MOTHER EARTH L.O.S. PERMISSIBLE (297.80 X 50%)							=	148.90	SQ.MT.

AS PER D.C.P.R. 2034
PARKING AREA STATEMENT

RESI.:–		PARKINGS REQD.	PROVD.
CARPET AREAS	NO. OF FLATS		
BELOW 45 SQ.MT 4FLATS / 1 PARKING	–	–	
BETWEEN 45–60 SQ.MT 2FLATS / 1 PARKING	24 NOS	12.00 NOS	
BETWEEN 60–90 SQ.MT 1FLAT / 1 PARKING	32 NOS	32.00 NOS	99 NOS
ABOVE 90 SQ.MT 1FLAT / 2 PARKINGS	–	–	
TOTAL	56 NOS	44.00 NOS	
ADD:– 25% VISITORS		11.00 NOS	
TOTAL PARKING REQUIRED		55.00 NOS	

BIG (B) = 50 NOS
SMALL (S) = 49 NOS
TOTAL = 99 NOS

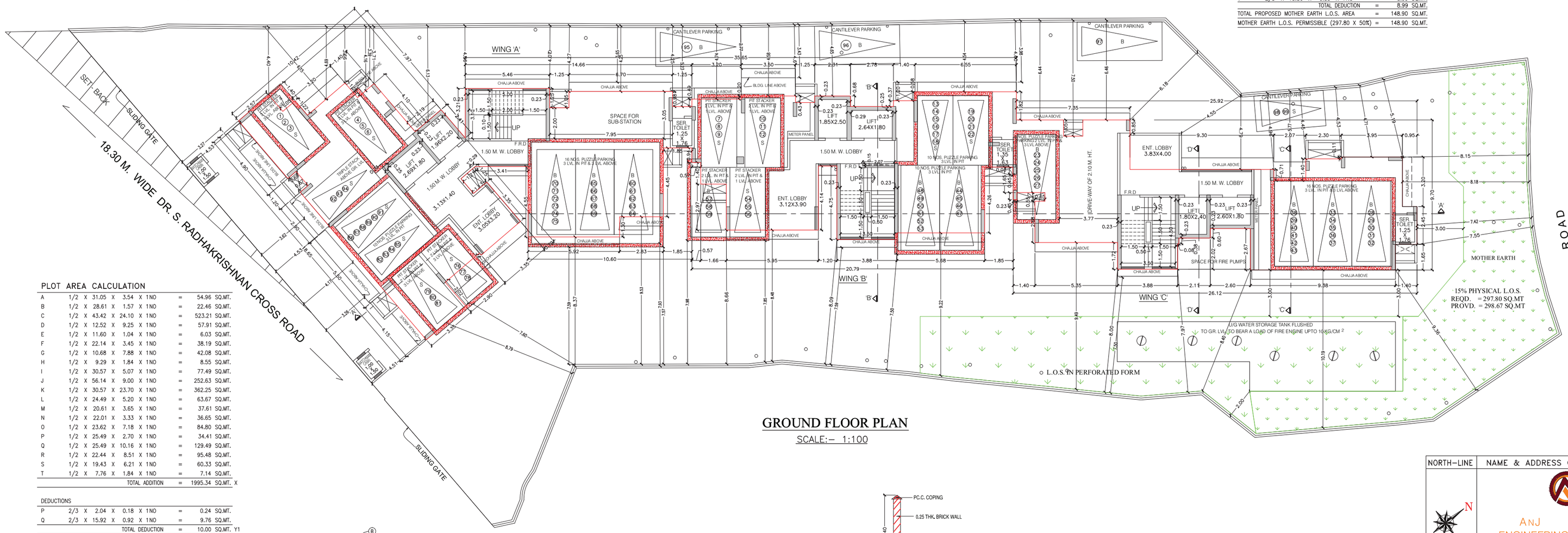

GROUND FLOOR PLAN
SCALE:– 1:100

PLOT AREA CALCULATION

A	1/2	X	31.05	X	3.54	X 1NO	=	54.95	SQ.MT.
B	1/2	X	28.61	X	1.57	X 1NO	=	22.46	SQ.MT.
C	1/2	X	43.42	X	24.10	X 1NO	=	523.21	SQ.MT.
D	1/2	X	12.52	X	9.25	X 1NO	=	57.91	SQ.MT.
E	1/2	X	11.60	X	1.04	X 1NO	=	6.03	SQ.MT.
F	1/2	X	22.14	X	3.45	X 1NO	=	38.19	SQ.MT.
G	1/2	X	10.68	X	7.88	X 1NO	=	42.08	SQ.MT.
H	1/2	X	9.29	X	1.84	X 1NO	=	8.55	SQ.MT.
I	1/2	X	30.57	X	5.07	X 1NO	=	77.49	SQ.MT.
J	1/2	X	56.14	X	9.00	X 1NO	=	252.63	SQ.MT.
K	1/2	X	30.57	X	23.70	X 1NO	=	362.25	SQ.MT.
L	1/2	X	24.49	X	5.20	X 1NO	=	63.67	SQ.MT.
M	1/2	X	20.61	X	3.65	X 1NO	=	37.61	SQ.MT.
N	1/2	X	22.01	X	3.33	X 1NO	=	36.65	SQ.MT.
O	1/2	X	23.62	X	7.18	X 1NO	=	84.80	SQ.MT.
P	1/2	X	25.49	X	2.70	X 1NO	=	34.41	SQ.MT.
Q	1/2	X	25.49	X	10.16	X 1NO	=	129.49	SQ.MT.
R	1/2	X	22.44	X	8.51	X 1NO	=	95.48	SQ.MT.
S	1/2	X	19.43	X	6.21	X 1NO	=	60.33	SQ.MT.
T	1/2	X	7.76	X	1.84	X 1NO	=	7.14	SQ.MT.
						TOTAL ADDITION	=	1995.34	SQ.MT. X

DEDUCTIONS

P	2/3	X	2.04	X	0.18	X 1NO	=	0.24	SQ.MT.
Q	2/3	X	15.92	X	0.92	X 1NO	=	9.76	SQ.MT.
						TOTAL DEDUCTION	=	10.00	SQ.MT. Y1
NET PLOT AREA [X – Y1]							=	1985.34	SQ.MT. (A)

SET–BACK AREA CALCULATION

X	1/2	X	26.847	X	2.88	X 1NO	=	38.66	SQ.MT.
						TOTAL ADDITION	=	38.66	SQ.MT. (B)
TOTAL GROSS PLOT AREA [A + B]							=	2024.00	SQ.MT.

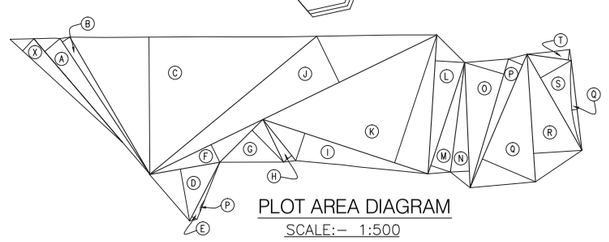

PLOT AREA DIAGRAM
SCALE:– 1:500

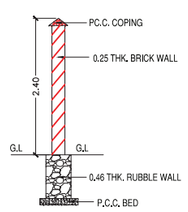

SECTION THR'O COMPOUND WALL
SCALE : 1:50

SECTION THR'O U/G TANK
SCALE : 1:100

NOTE:- ALL DIMENSION ARE IN METERS

PROFORM B | P-4357/2019(179)/K/E WARD/MOGRA/337/1/NEW | 1/4

THIS PLAN IS DIGITALLY SIGNED & ISSUED
HENCE NO PHYSICAL SIGNATURE IS REQUIRED

THIS CANCELS APPROVAL TO THE PREVIOUS PLANS SANCTIONED UNDER NO. P-4357/2019(179)/K/E WARD/MOGRA/337/1/NEW DATED:- 31ST AUGUST - 2020

APPROVED SUBJECT TO CONDITIONS MENTIONED THIS OFFICE P-4357/2019(179)/K/E WARD/MOGRA/337/1/NEW DATED:- 18/08/2021

SANTOSH GOPAL MANDAVKAR	Dushyant Kumar Jitendra Ahirwar	Navnath Sopanrao Ghadge
S.E.B.P. (K/EN)	A.E.B.P. (K/E)	E.E.B.P.(K–WARD)

MUNICIPAL CORPORATION OF GREATER MUMBAI

FORM–II

CONTENTS OF THE SHEET

GROUND FLOOR PLAN, 1ST FLOOR PLAN,
SUMMARY, CARPET AREA STATEMENT, CAR PARKING STATEMENT,
PLOT AREA DIAGRAM & CALCULATION, BLOCK PLAN & LOCATION PLAN,
15% PHYSICAL L.O.S. AREA DIAGRAM & CALCULATION,
SECTION THR'O U/G TANK & COMPOUND WALL

FORM–I

I	AREA STATEMENT	SQ.MT.
1	AREA OF PLOT	2024.00
	a) AREA OF RESERVATION IN PLOT	
	b) AREA OF ROAD SET BACK	38.66
	c) AREA OF D. P. ROAD	-
2	DEDUCTIONS FOR	
(A)	FOR RESERVATION/ROAD AREA	
	a) ROAD SETBACK AREA TO BE HANDED OVER (100%) (REGULATION NO. 16)	38.66
	b) PROPOSED D.P. ROAD TO BE HANDED OVER (100%) (REGULATION NO. 16)	-
	c) (I) RESERVATION AREA TO BE HANDED OVER (100%) (REGULATION NO. 17)	-
	(ii) RESERVATION AREA TO BE HANDED OVER AS PER AR (REGULATION NO. 17)	-
	d) AREA OUT OF POSSESSION	-
(B)	FOR AMENITY AREA	
	a) AREA OF AMENITY PLOT/PLOTS TO BE HANDED OVER AS PER DCR 14(A)	-
	b) AREA OF AMENITY PLOT/PLOTS TO BE HANDED OVER AS PER DCR 14(B)	-
	c) AREA OF AMENITY PLOT/PLOTS TO BE HANDED OVER AS PER DCR 35 (ABEYANCE)	-
(C)	DEDUCTION FOR EXISTING BUA TO BE RETAINED IF ANY/ LAND COMPONENT OF EXISTING BUA / EXISTING BUA AS PER REGULATION UNDER WHICH THE DEVELOPMENT WAS ALLOWED.	-
3	TOTAL DEDUCTION : [(2)(A) + 2(B)) + 2(C) AS AND WHEN APPLICABLE.]	38.66
4	BALANCE AREA OF PLOT [1-3]	1985.34
5	PLOT AREA UNDER DEVELOPMENT AFTER AS PER REGULATION 30(A) TO BE HANDED OVER TO MCGM / APPROPRIATE AUTHORITY AS PER SR. NO. 4 ABOVE	1.00
6	ZONAL (BASIC) FSI (0.50 OR 0.75 OR 1.00 OR 1.33)	1985.34
7	BUILT UP AREA AS PER ZONAL (BASIC) FSI (5 X 6) (IN CASE OF MILL LAND PERMISSIBLE BUA KEPT IN ABEYANCE)	
8	BUA EQUAL TO AREA OF LAND HANDED OVER AS PER REGULATION 30(A) i) AS PER 2(A) AND 2(B) EXCEPT 2(A)(ii) (II) ABOVE WITH IN CAP OF " ADMISSIBLE TDR" AS COLUMN 6 OF TABLE - 12 ON REMAINING / BALANCE PLOT. AS PER REG. NO. 32(4) & 32(4.1) TABLE NO. 12A(1)(a) (38.66 X 2)	77.32
	ii) IN CASE OF 2(A)(c) (ii) PERMISSIBLE OVER AND ABOVE PERMISSIBLE BUA ON REMAINING / BALANCE PLOT.	-
	iii) IN CASE OF 2(A)(a) OVER AND ABOVE PERMISSIBLE BUA AS PER 30(3)(a)	-
9	BUA IN LIEU OF COST OF CONSTRUCTION OF BUILT UP AMENITY TO BE HANDED OVER (WITHIN THE LIMIT OF PERMISSIBLE BUA ON REMAINING PLOT)	-
10	BUILT UP AREA DUE TO "ADDITIONAL FSI ON PAYMENT OF PREMIUM" AS PER TABLE NO. 12 OF REGULATION No. 30(A) ON REMAINING / BALANCE PLOT. (50%)	992.67
11	a) INCENTIVE ADDITIONAL BUA AS PER 33(7) (B) 1: 707.17X15% = 106.08 OR 42 TENEMENT X 10 SQ.MT. = 420.00 SQ.MT	420.00
	b) PROTECTED DEVELOPMENT AS PER REG. 30(C) TOTAL PERMISSIBLE BUA = 1985.34 X 15% = 297.80 FOOT AREA CONSIDERED FOR F.S.I AS PER 33(7)-BACK = 198S.34 SQ.MT EARLIER PROTECTED BUA = 78.81 SQ.MT	78.81
	c) BUILT UP AREA DUE TO ADMISSIBLE "TDR" AS PER TABLE No. 12 OF REGULATION No. 30(A) & 32 ON REMAINING / BALANCE PLOT.	-
12	PERMISSIBLE BUILT UP AREA (AS THE CASE MAY BE WITH / WITHOUT BUA AS PER 2(c))	3554.14
13	PROPOSED BUA (AS THE CASE MAY BE WITH / WITHOUT BUA AS PER 2(c))	3554.14
14	TDR GENERATED IF ANY AS PER REGULATION 30 (A) AND 32.	-
15	FUNGIBLE COMPENSATORY AREA AS PER REGULATION No. 31(3)	NIL
a)	i) PERMISSIBLE FUNGIBLE COMPENSATORY AREA FOR REHAB COMPONENT WITHOUT CHARGING PREMIUM CE/1256/BSU/AK (BLDG. 'A' = 828.67 X 35% = 290.03 SQ.MT) CE/1497/BSU/AK (BLDG. 'B' = 1235.48 X 35% = 432.42 SQ.MT) = 722.45 SQ.MT	722.45
	ii) FUNGIBLE COMPENSATORY AREA AVAILED FOR REHAB COMPONENT WITHOUT CHARGING PREMIUM	661.69
(b)	i) PERMISSIBLE FUNGIBLE COMPENSATORY AREA BY CHARGING PREMIUM (35% X 1X X 35%=1243.95-722.45)	521.50
	ii) FUNGIBLE COMPENSATORY AREA AVAILED ON PAYMENT OF PREMIUM	521.50
16	TOTAL BUA PROPOSED INCLUDING FUNGIBLE COMPENSATORY AREA [13 + 15 (a)(i) + 15(b)(i)]	4737.33
17	FSI CONSUMED ON NET PLOT [13 / 4]	1.79
II	OTHER REQUIREMENTS	
A	RESERVATION/DESIGNATION	
	a) NAME OF RESERVATION	
	b) AREA OF RESERVATION AFFECTING THE PLOT	
	c) AREA OF RESERVATION LAND TO BE HANDED / HANDED OVER AS PER REGULATION NO. 17	N.P.
	d) BUILT UP AREA AREA OF AMENITY TO BE HANDED OVER AS PER REGULATION NO. 17	
	e) AREA/BUILT UP AREA OF DESIGNATION	
B	PLOT AREA/BUILT UP AMENITY TO BE HANDED OVER AS PER REGULATION NO.	
	(i) 14(A)	
	(ii) 14(B)	N.P.
	(iii) 15	
C	REQUIREMENTS OF RECREATIONAL OPEN SPACE IN LAYOUT/PLOT AS PER REGULATION NO. 27	-
D	TENEMENTS STATEMENT	
	(i) PROPOSED BUILT UP AREA (13 ABOVE)	3554.14
	(ii) LESS DEDUCTION OF NON RESIDENTIAL AREA (SHOP ETC.)	-
	(iii) AREA AVAILABLE FOR TENEMENTS (I)-(ii)	3554.14
	(IV) TENEMENTS PERMISSIBLE (DENSITY OF TENEMENTS/HECTARE)	160 NOS
	(v) TOTAL NUMBER OF TENEMENTS PROPOSED ON PLOT	56 NOS
E	PARKING STATEMENT	
	i) PARKING REQUIRED BY REGULATIONS FOR	55 NOS
	CAR	44 NOS
	SCOOTER / MOTOR CYCLE	
	OUTSIDERS / VISITORS	11 NOS
	ii) COVERED GARAGE PERMISSIBLE	-
	iii) COVERED GARAGES	-
	PROPOSED CAR	88 NOS
	SCOOTER/MOTOR CYCLE	
	OUTSIDERS / VISITORS	11 NOS
	iv) TOTAL PARKING PROVIDED (PARKING PROVIDED AS PER FULL CONSUMPTION)	99 NOS
F	TRANSPORT VEHICLE PARKING	
	i) SPACE F OR TRANSPORT VEHICLE PARKING REQUIRED BY REGULATION	N.P.
	ii) TOTAL NO. OF TRANSPORT VEHICLE PARKING SPACES PROVIDED	

NOTE :–
THE PROFORMA IS FOR AN ILLUSTRATIVE GUIDELINE ONLY. THE PROFORMA MAY BE MODIFIED TO SUIT PROVISIONS OF DCR UNDER WHICH THE DEVELOPEMENT IS PROPOSED

CERTIFICATE OF AREA

CERTIFIED THAT I HAVE SURVEYED THE PLOT UNDER REFERENCE ON 29–05–2019 AND THAT THE DIMENSIONS OF THE SIDES, ETC. OF THE PLOT STATED ON THE PLAN ARE AS MEASURED ON SITE AND THE AREA SO WORKED OUT IS 2024.00 SQ.MT. AND TALLIES WITH THE AREA STATED IN THE DOCUMENT OF OWNERSHIP/TOWN PLANNING SCHEME RECORDS.

VIVEK DATTATRAYA JADE

Digitally signed by VIVEK DATTATRAYA JADE
DN: c=IN, o=Personal, pseudonym=30bfe39f14231b6d1fe1bfa8e08cc42898d8a28b8235e372e9c0833f6db274, postalCode=400002, st=MAHARASHTRA, serialNumber=03f78da41bce4fdf3c4b22c2d0705b9cf771f6d82acbe1696ef6ae0b984967b0, cn=VIVEK DATTATRAYA JADE
Date: 2021.08.09 00:54:01 +05'30'

SIGNATURE OF L.S

NORTH–LINE	NAME & ADDRESS OF LICENSE SURVEYORS	DESCRIPTION OF PROPOSAL & PROPERTY.
N	ANJ ENGINEERING CONSULTANTS LLP — license surveyors consulting engineers — 1, NEELANJANI PRARTHANA SAMAJ ROAD, VILEPARLE (EAST), MUMBAI-57. TEL:- 2612 99 09	PROPOSED BUILDING ON PLOT BEARING C.T.S. NOS. 179, S.NO. 48 H.NO. 11(PT), 12(PT), 14, S.NO. 46 H.NO. 15(PT) OF VILLAGE MOGRA, DR. S. RADHAKRISHNAN CROSS ROAD, ANDHERI (EAST), MUMBAI.
		NAME & ADDRESS OF OWNER
		STATE BANK OF INDIA EMPLOYEES SAKAR SWAPNA C.H.S. LTD. DR. S. RADHAKRISHNAN CROSS ROAD, ANDHERI (EAST), MUMBAI – 400069
LICENSE SURVEYORS SIGNATURE		OWNER SIGNATURE
VIVEK DATTATRAYA JADE	Digitally signed by VIVEK DATTATRAYA JADE DN: c=IN, o=Personal, pseudonym=30bfe39f14231b6d1fe1bfa8e08cc42898d8a28b8235e372e9c0833f6db274, postalCode=400002, st=MAHARASHTRA, serialNumber=03f78da41bce4fdf3c4b22c2d0705b9cf771f6d82acbe1696ef6ae0b984967b0, cn=VIVEK DATTATRAYA JADE Date: 2021.08.09 00:54:01 +05'30'	SATISH NARAYAN AROSKAR — Digitally signed by SATISH NARAYAN AROSKAR DN: c=IN, o=Personal, CID - 4714029, 13.4.20=0013dfacafd87ba5f94d23d563d63fd9dd204ab0d6d88888f823c3647a2cb6c, postalCode=400085, st=Maharashtra, serialNumber=82e6f017e747916fa25c9ceiceeff9fe7fd89660ac170cc4d9d0d20b308c, cn=SATISH NARAYAN AROSKAR Date: 2021.08.09 19:45:34 +05'30'

JOB NO.	DRG.NO.	SCALE	DATE	DRN. BY
031	01	AS SHOWN		T.D.C