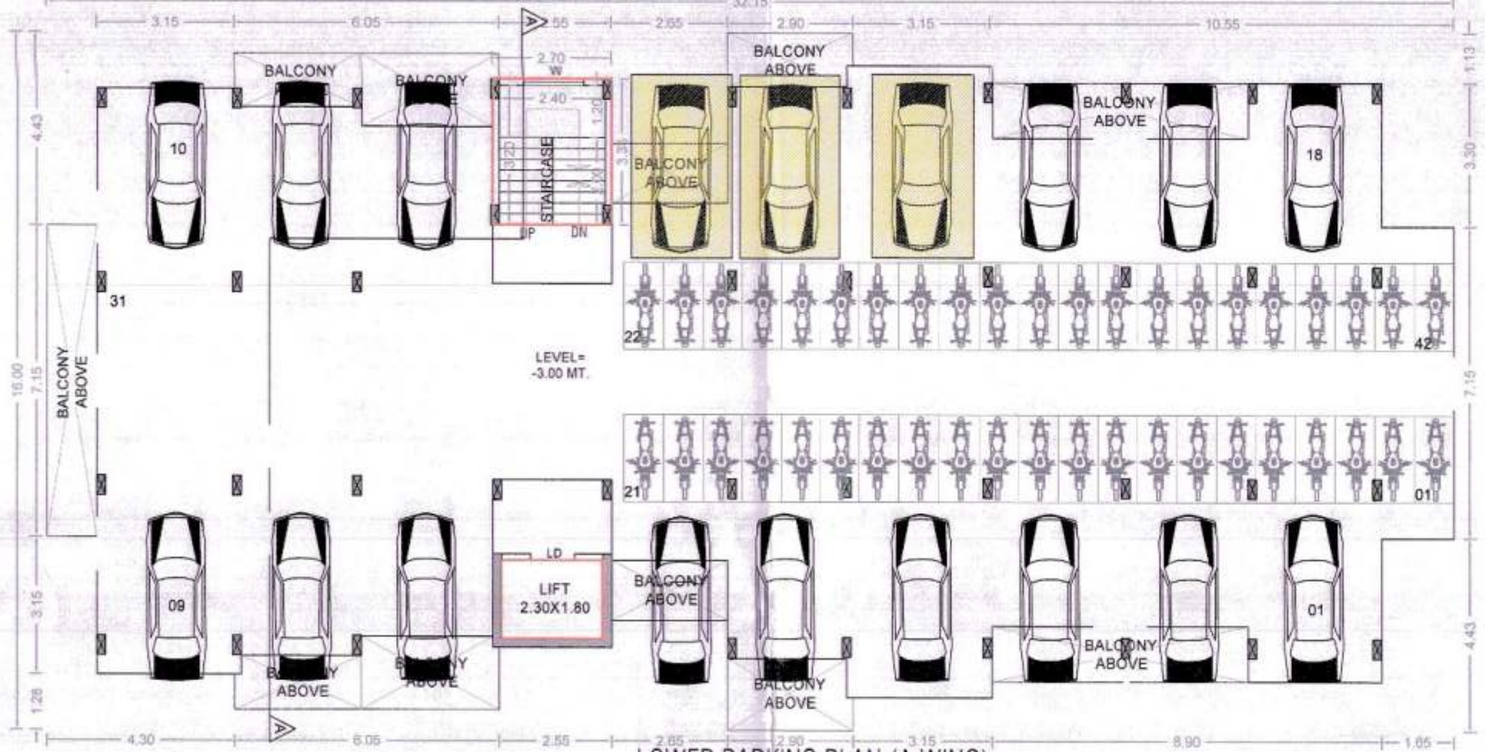

LOWER PARKING PLAN (A WING)

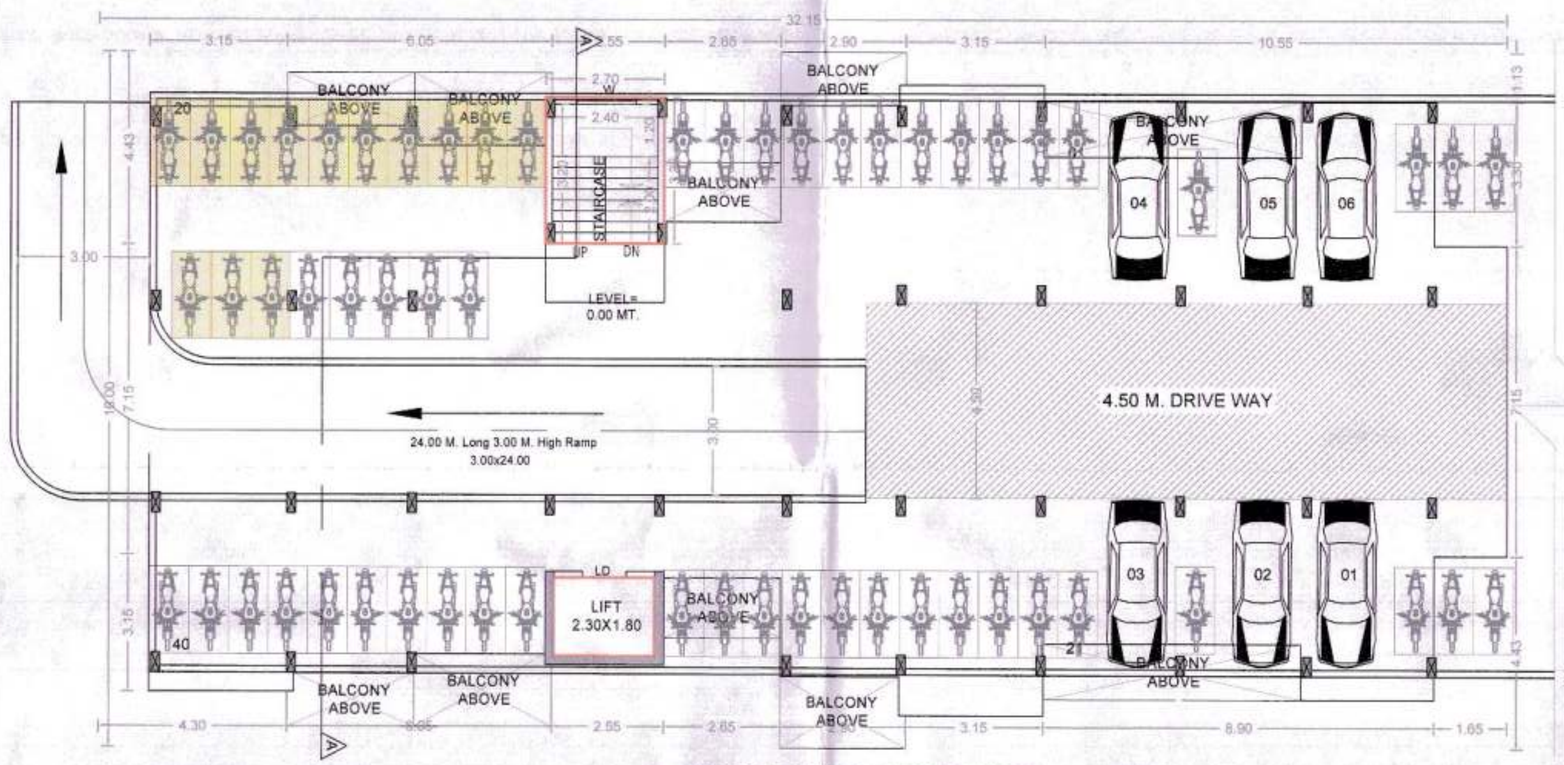

UPPER PARKING PLAN (A WING)

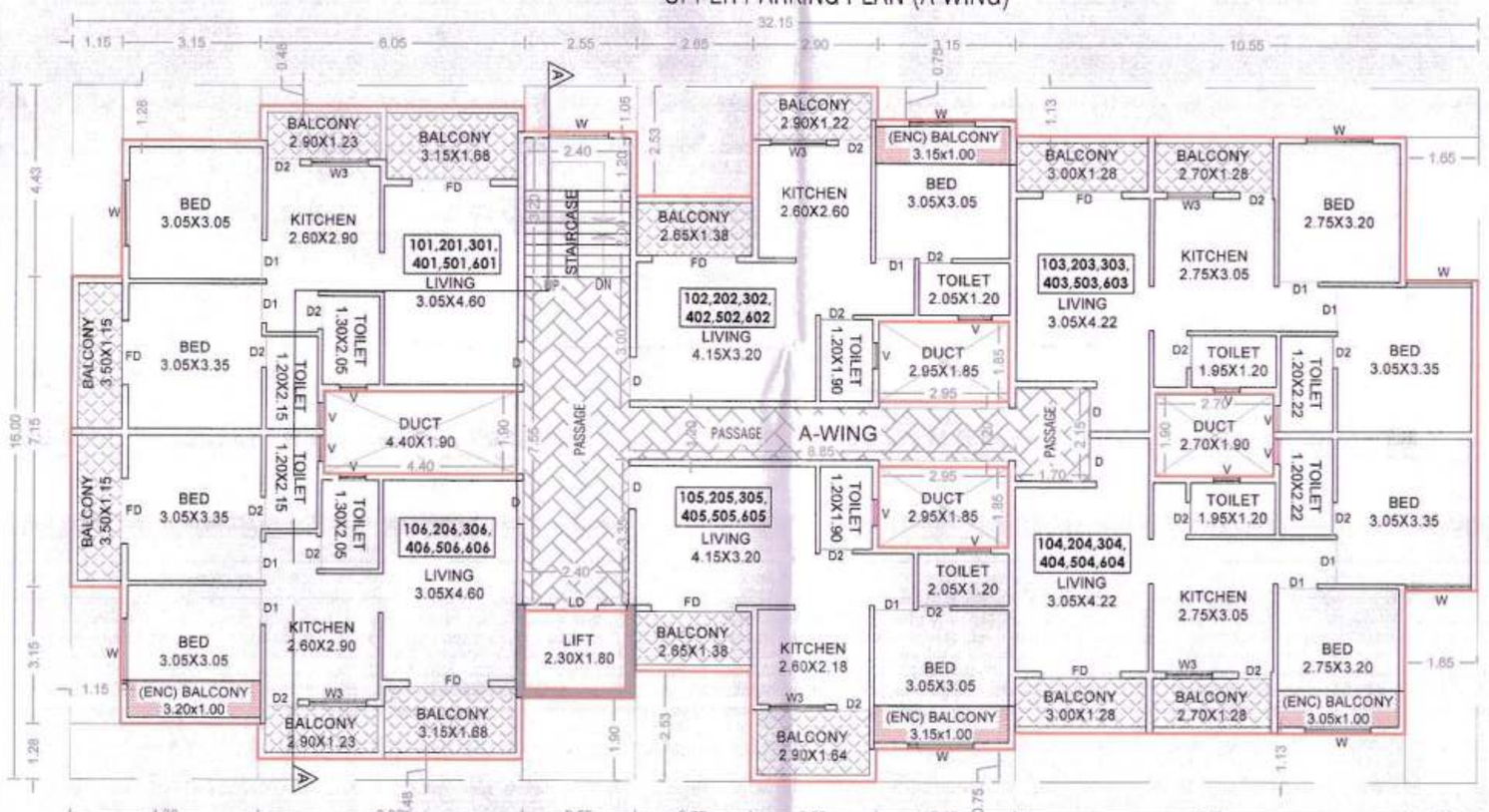

TYPICAL 1ST,2ND,3RD,4TH, 5TH & 6TH FLOOR PLAN (A WING)

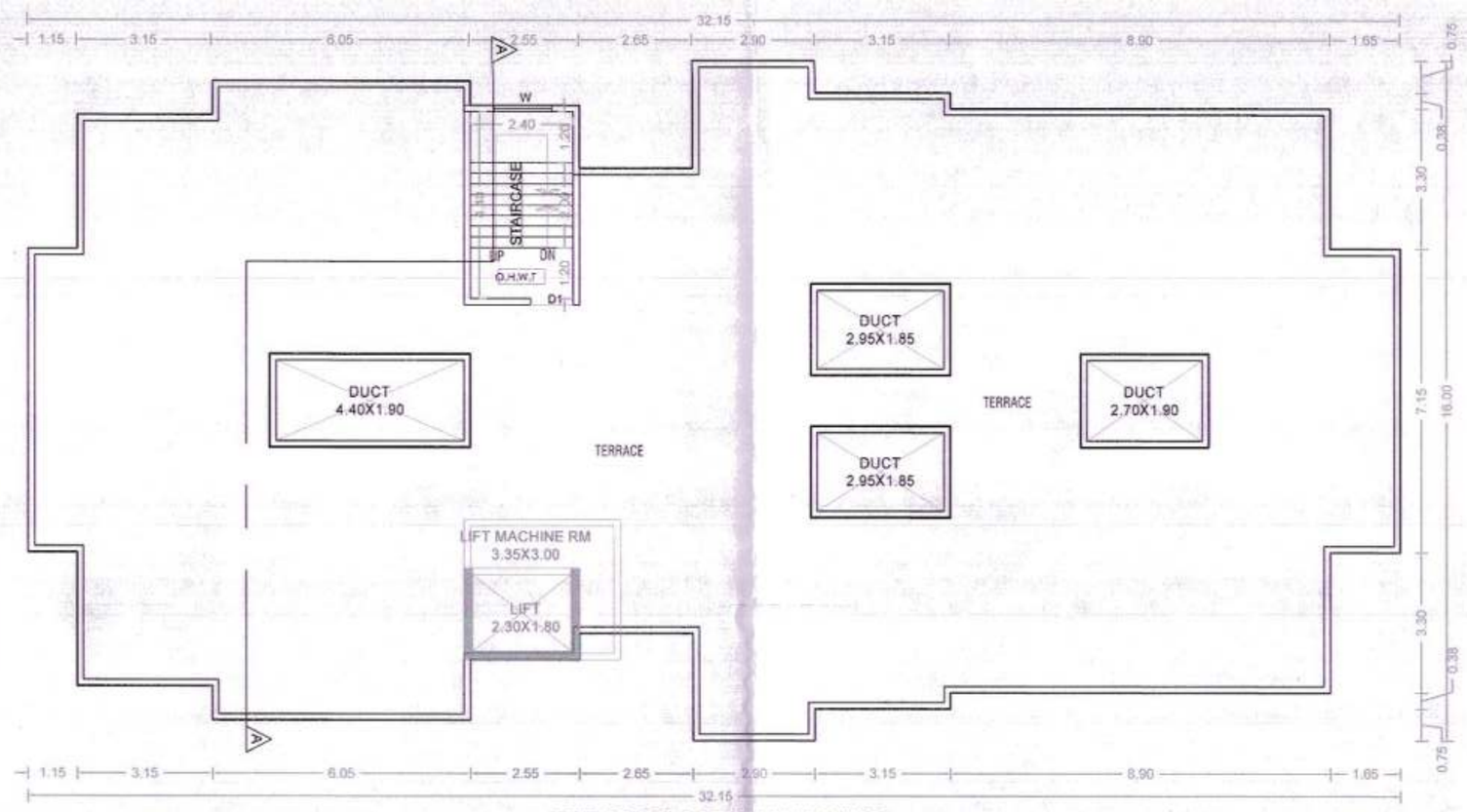

TERRACE FLOOR PLAN (A WING)

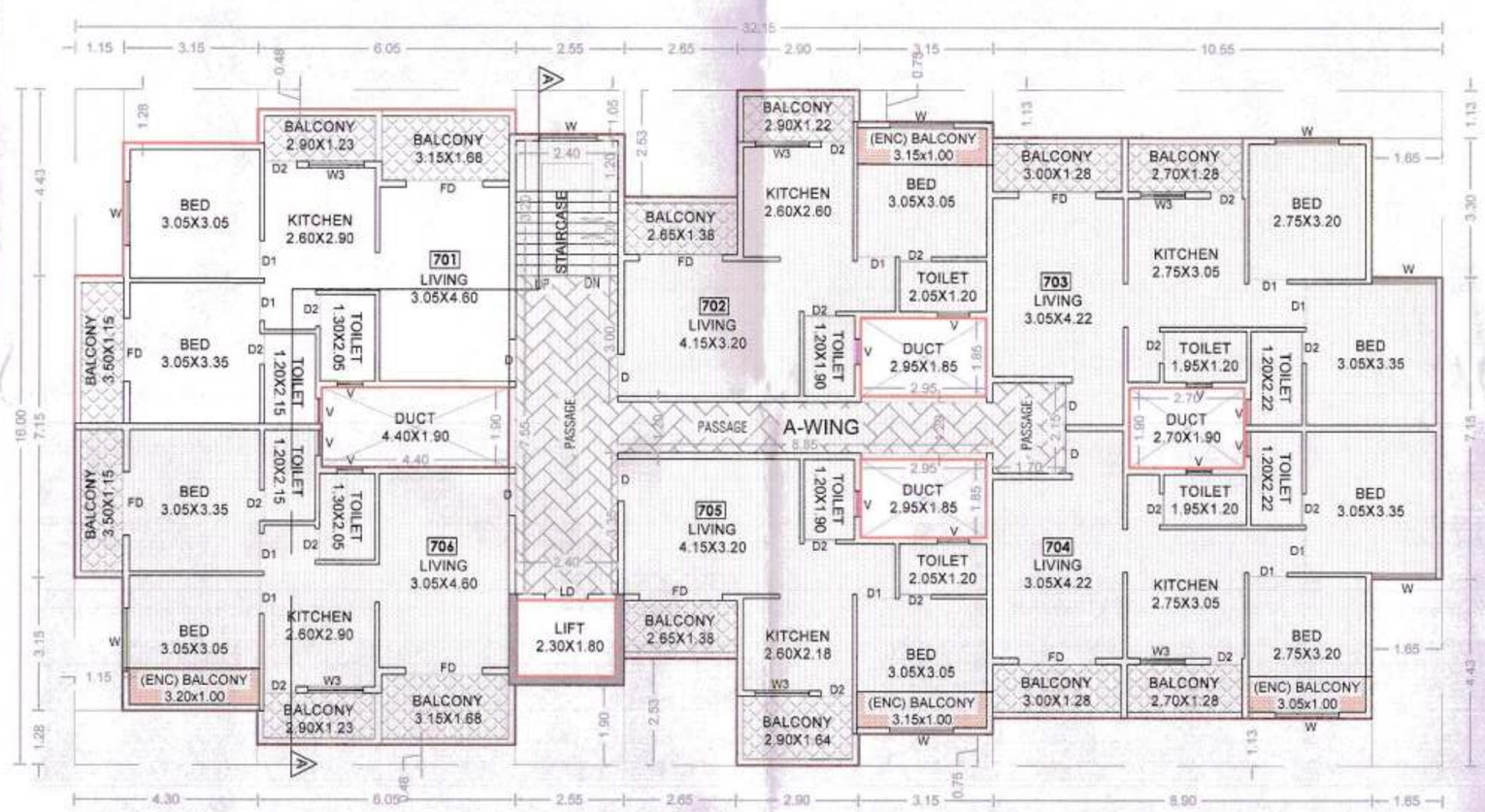

SEVENTH FLOOR PLAN (A WING) (MHADA)

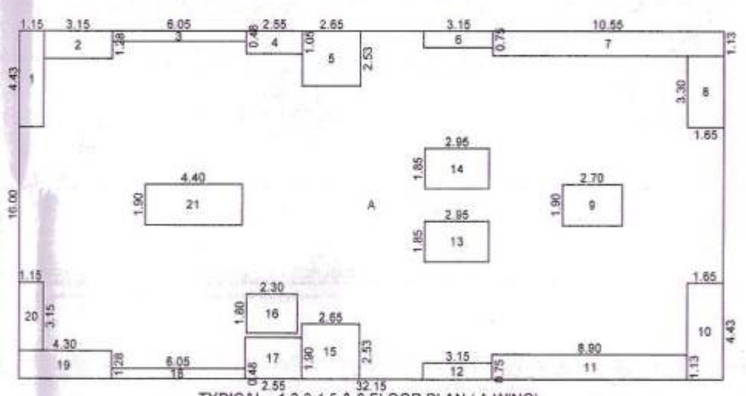

TYPICAL - 1,2,3,4,5 & 6 FLOOR PLAN (A WING)

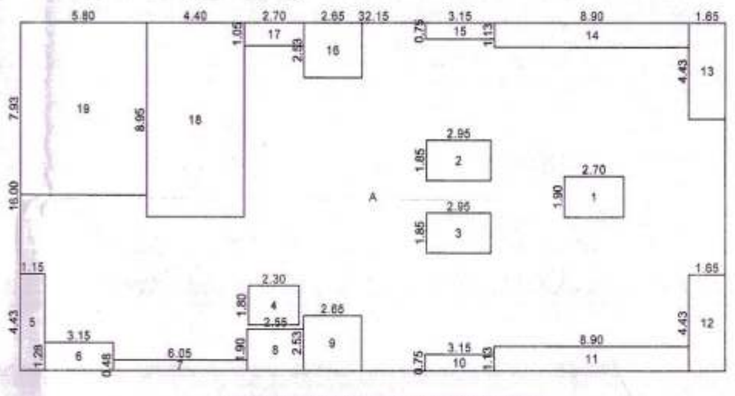

SEVENTH FLOOR PLAN (A WING) (MHADA)

AREA KEY PLAN
FIRST, SECOND, THIRD, FOURTH, FIFTH & SIXTH FLOOR (A WING)
AREA CALCULATIONS
A) 32.15 X 16.00 X 1 = 514.40 SQ.M.
DEDUCTIONS
1) 1.15 X 4.43 X 1 = 5.09 SQ.M.
2) 3.15 X 1.28 X 1 = 4.03 SQ.M.
3) 6.05 X 0.48 X 1 = 2.90 SQ.M.
4) 2.55 X 1.05 X 1 = 2.68 SQ.M.
5) 2.65 X 2.53 X 1 = 6.70 SQ.M.
6) 3.15 X 0.75 X 1 = 2.36 SQ.M.
7) 10.55 X 1.13 X 1 = 11.92 SQ.M.
8) 1.65 X 3.30 X 1 = 5.44 SQ.M.
9) 2.70 X 1.90 X 1 = 5.13 SQ.M.
10) 1.65 X 4.43 X 1 = 7.31 SQ.M.

DEDUCTIONS
11) 8.90 X 1.13 X 1 = 10.06 SQ.M.
12) 3.15 X 0.75 X 1 = 2.36 SQ.M.
13) 2.95 X 1.85 X 1 = 5.46 SQ.M.
14) 2.95 X 1.85 X 1 = 5.46 SQ.M.
15) 2.65 X 2.53 X 1 = 6.70 SQ.M.
16) 2.30 X 1.80 X 1 = 4.14 SQ.M.
17) 2.55 X 1.90 X 1 = 4.84 SQ.M.
18) 6.05 X 0.48 X 1 = 2.90 SQ.M.
19) 4.30 X 1.28 X 1 = 5.50 SQ.M.
20) 1.15 X 3.15 X 1 = 3.62 SQ.M.
21) 4.40 X 1.90 X 1 = 8.36 SQ.M.
TOTAL = 112.96 SQ.M.
NET AREA 514.40-112.96 = 401.44 SQ.M.

AREA KEY PLAN
SEVENTH FLOOR
AREA CALCULATIONS
A) 32.15 X 16.00 X 1 = 514.40 SQ.M.
DEDUCTIONS
1) 2.70 X 1.90 X 1 = 5.13 SQ.M.
2) 2.95 X 1.85 X 1 = 5.46 SQ.M.
3) 2.95 X 1.85 X 1 = 5.46 SQ.M.
4) 2.30 X 1.80 X 1 = 4.14 SQ.M.
5) 1.15 X 4.43 X 1 = 5.09 SQ.M.
6) 3.15 X 1.28 X 1 = 4.03 SQ.M.
7) 6.05 X 0.48 X 1 = 2.90 SQ.M.
8) 2.55 X 1.90 X 1 = 4.84 SQ.M.
9) 2.65 X 2.53 X 1 = 6.70 SQ.M.

DEDUCTIONS
10) 3.15 X 0.75 X 1 = 2.36 SQ.M.
11) 8.90 X 1.13 X 1 = 10.06 SQ.M.
12) 1.65 X 4.43 X 1 = 7.31 SQ.M.
13) 1.65 X 4.43 X 1 = 7.31 SQ.M.
14) 8.90 X 1.13 X 1 = 10.06 SQ.M.
15) 3.15 X 0.75 X 1 = 2.36 SQ.M.
16) 2.65 X 2.53 X 1 = 6.70 SQ.M.
17) 2.70 X 1.05 X 1 = 2.84 SQ.M.
18) 4.40 X 8.95 X 1 = 39.38 SQ.M.
19) 5.80 X 7.93 X 1 = 45.99 SQ.M.
TOTAL = 178.12 SQ.M.
NET AREA 514.40-178.12 = 336.28 SQ.M.

STAMP OF APPROVAL

SANCTION NO. :-
1) BP / MOSHI / 36 / 2020, DATE -10 / 11 / 2020
Sanctioned No. B.P/ Moshi/441/2021
Subject to conditions mentioned in the Office Order No.
aven dated 13/08/2021
Pimpri
Date :13/08/2021

O. C. Signed by
Joint City Engineer

for Joint City Engineer
Building Permission Dept.
PCMC., Pimpri, Pune-18.

PROPOSED PARKING		
(WING - A) PARKING		
	CAR	SCOOTER
LOWER PARKING	18	60
UPPER PARKING	06	40
TOTAL	24	100

PROPOSED BUILDING - (A - WING)

BUILDING NO.	FLOOR NO.	TOTAL BUILT UP AREA OF FLOOR AS PER OUTER CONTRUCTION LINE	TENEMENTS
(1)	(2)	(3)	
A - WING	LOWER PARKING FL.	9.04 SQ.MT	
	UPPER PARKING FL.	9.04 SQ.MT	
	FIRST FLOOR	401.44 SQ.MT	06
	SECOND FLOOR	401.44 SQ.MT	06
	THIRD FLOOR	401.44 SQ.MT	06
	FOURTH FLOOR	401.44 SQ.MT	06
	FIFTH FLOOR	401.44 SQ.MT	06
	SIXTH FLOOR	401.44 SQ.MT	06
	SEVENTH FLOOR (PART MHADA)	401.44 SQ.MT	06
TOTAL		2828.16 SQ.MT	42

A -WING AREA WITHOUT MHADA
= 2828.16 - 336.28 = 2491.88 SQ.MT.

AREA DETAILS OF APARTMENT - A - WING

BUILDING NO.	FLOOR NO.	APARTMENT NO.	CARPET AREA OF APARTMENT	AREA OF OPEN BALCONY ATTACHED TO APARTMENT	AREA OF ENCLOSE BALCONY ATTACHED TO APARTMENT
(1)	(2)	(3)	(4)	(5)	(6)
A WING	1ST,2ND, 3RD,4TH, 5TH,6TH, & 7TH	101,201,301,401, 501,601,701	50.90	10.88	0.00
		102,202,302,402, 502,602,702	36.51	6.04	2.67
		103,203,303,403, 503,603,703	52.08	6.58	0.00
		104,204,304,404, 504,604,704	49.61	6.58	2.46
		105,205,305,405, 505,605,705	35.42	7.12	2.67
		106,206,306,406, 506,606,706	48.22	10.88	2.67

PROJECT :
PROPOSED RESIDENTIAL BUILDING GAT.NO.-621(P), AT-MOSHI,TAL-HAVELI, DIST-PUNE

OWNER / P.A.H. NAME :
M/S PRERANA GROUP
1)Pravinkumar C. Patel
2)Shaileshkumar G. Patel

ARCHITECT:
AR.NITIN R. PATEL
LIC.NO.-CA/2007/39428

PRECISION
ARCHITECTS & PLANNER
OFFICE NO. 1328/123, G WING, FIRST FLOOR,JAY GANESH SAMARAJYA, SPINE ROAD,BHOSARI,PUNE -411039.
E-mail : precisionap_pune@rediffmail.com

N

DRG NO :		SCALE	: 1 : 100
INWARD NO.	NWD/ZONE/MOS/PRB6/0114/19	DATE	29/05/2021
KEY NO.		SHEET NO.	2 / 10