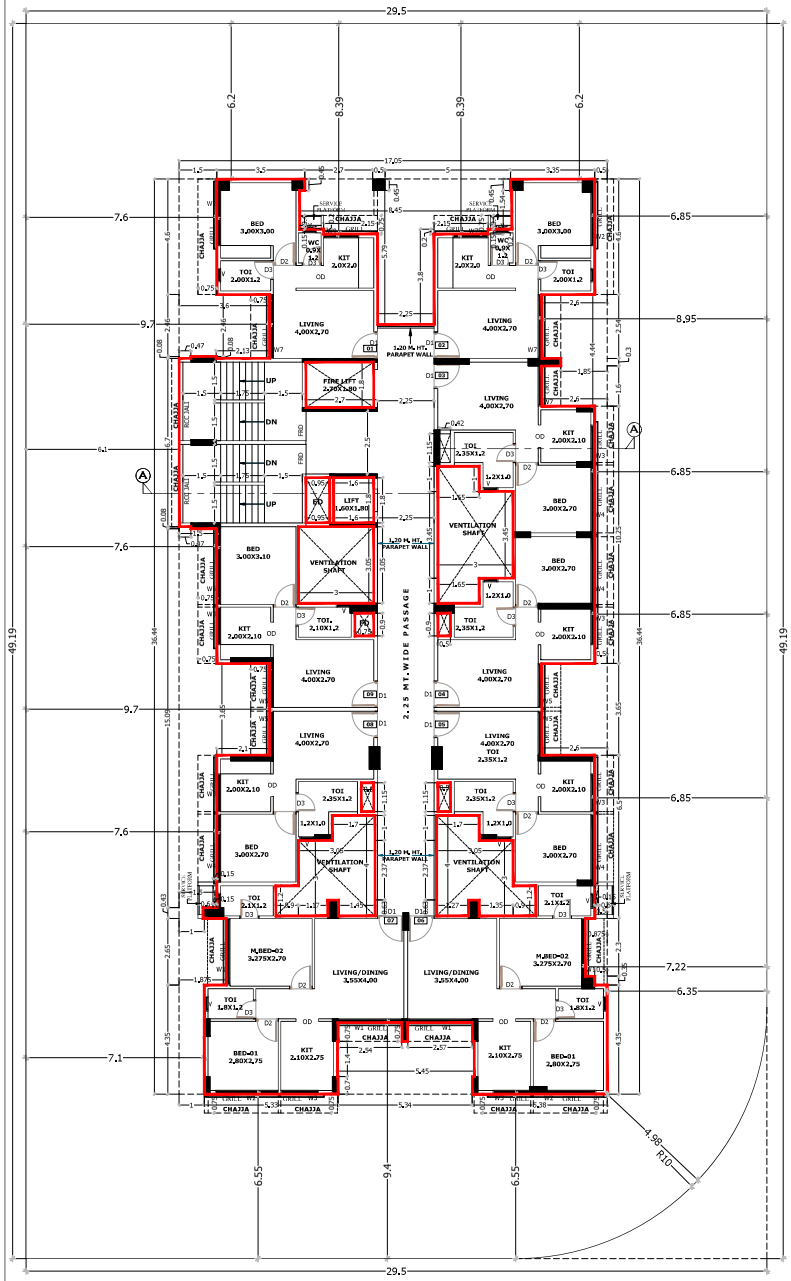

TYP. (2ND TO 5TH) FLOOR PLAN SCALE 1:100

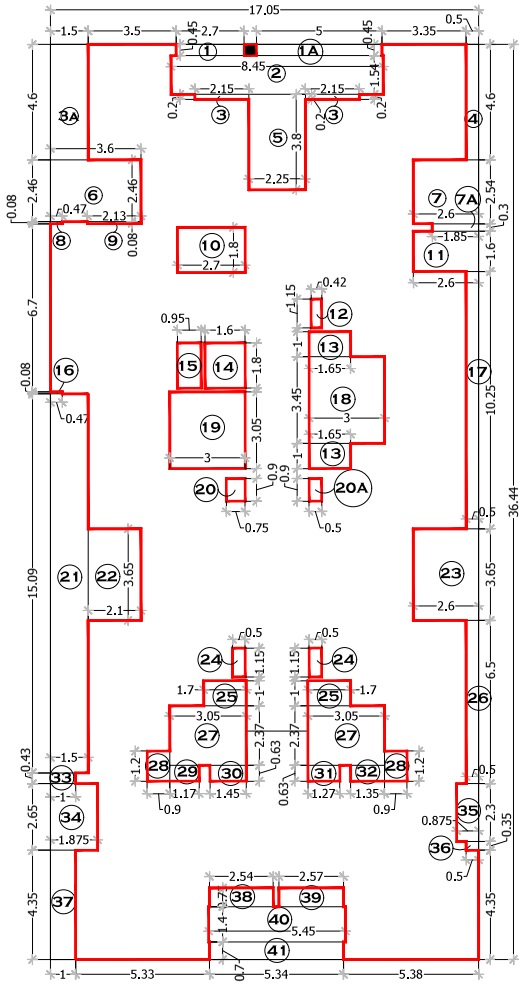

AREA DIAGRAM OF TYP. (2ND TO 5TH) FLOOR PLAN (RESIDENTIAL)

SCALE : 1:100

TYP. (2ND TO 5TH) FLOOR AREA CALCULATION

AREA OF BLOCK (A)								
A	17.050	x	36.440	x	1	=	621.302	M²
TOTAL							621.302	M²
DEDUCTIONS (B)								
1	2.700	x	0.450	x	1	=	1.215	M²
1A	5.000	x	0.450	x	1	=	2.250	M²
2	8.450	x	1.540	x	1	=	13.013	M²
3	4.150	x	0.200	x	2	=	0.860	M²
3A	1.500	x	4.600	x	1	=	6.900	M²
4	0.500	x	4.600	x	1	=	2.300	M²
5	2.250	x	3.800	x	1	=	8.550	M²
6	3.600	x	2.460	x	1	=	8.856	M²
7	2.600	x	2.540	x	1	=	6.604	M²
7A	1.850	x	0.300	x	1	=	0.555	M²
8	0.470	x	0.080	x	1	=	0.038	M²
9	2.130	x	0.080	x	1	=	0.170	M²
10	2.700	x	1.800	x	1	=	4.860	M²
11	2.600	x	1.600	x	1	=	4.160	M²
12	0.420	x	1.150	x	1	=	0.483	M²
13	1.650	x	1.000	x	2	=	3.300	M²
14	1.600	x	1.800	x	1	=	2.880	M²
15	0.950	x	1.800	x	1	=	1.710	M²
16	0.470	x	0.080	x	1	=	0.038	M²
17	0.500	x	10.250	x	1	=	5.125	M²
18	3.000	x	3.450	x	1	=	10.350	M²
19	3.000	x	3.050	x	1	=	9.150	M²
20	0.750	x	0.900	x	1	=	0.675	M²
20A	0.500	x	0.900	x	1	=	0.450	M²
21	1.500	x	15.090	x	1	=	22.635	M²
22	2.100	x	3.650	x	1	=	7.665	M²
23	2.600	x	3.650	x	1	=	9.490	M²
24	0.500	x	1.150	x	2	=	1.150	M²
25	1.700	x	1.000	x	2	=	3.400	M²
26	0.500	x	6.500	x	1	=	3.250	M²
27	3.050	x	2.370	x	2	=	14.457	M²
28	0.900	x	1.200	x	2	=	2.160	M²
29	1.170	x	0.630	x	1	=	0.737	M²
30	1.450	x	0.630	x	1	=	0.914	M²
31	1.270	x	0.630	x	1	=	0.800	M²
32	1.350	x	0.630	x	1	=	0.851	M²
33	1.000	x	0.430	x	1	=	0.430	M²
34	1.875	x	2.650	x	1	=	4.969	M²
35	0.875	x	2.300	x	1	=	2.013	M²
36	0.500	x	0.350	x	1	=	0.175	M²
37	1.000	x	4.350	x	1	=	4.350	M²
38	2.540	x	0.750	x	1	=	1.905	M²
39	2.570	x	0.750	x	1	=	1.928	M²
40	5.450	x	1.400	x	1	=	7.630	M²
41	5.340	x	0.700	x	1	=	3.738	M²
TOTAL DEDUCTION							189.139	M²

BUILT UP AREA (C)					
(A)	-	(B)	=	(C)	M²
621.302	-	189.139	=	432.163	M²
TOTAL			=	432.163	M²

STAMP OF APPROVALS OF PLAN 3/5

APPROVED SUBJECT TO THE CONDITION MENTIONED IN This Office Letter No. CIDCO/BP-18011/TPO(NM & K)/2022/9213 dtd. 11 Mar 2022

Document certified by BHUSHAN RAMCHANDRA CHAUDHARI <assoc@nrl.naina@cidco.com>.
Name : BHUSHAN RAMCHANDRA CHAUDHARI
Designation : Associate Planner
Organization : CIDCO LTD
Date : 06-Apr-2022 20: 27:17

PROPOSED RESIDENTIAL CUM COMM. BUILDING ON PLOT NO-96, SECTOR-07, DAPOLI-PUSHPAK NAGAR, TAL-PANVEL, DIST-RAIGAD, NAVI MUMBAI.

NORTH

SIGNATURE OF OWNER

WE ARE APPOINTED FOR DESIGNING & APPROVAL OF THE PROJECT, BUT WE ARE NOT RESPONSIBLE FOR THE OWNERSHIP & TITLE OF THE PROPERTY.
AR. KAUSHAL JADIA

SIGNATURE OF ARCHITECT

disha
www.dishaarch.com
architects - engineers-interior designers
008,Bldg.no.9,Nl-6,Sector 15,Nerul,Navi Mumbai 400706 I
Tel.:022-27727982 I e-mail:info@dishaarch.com I www.dishaarch.com

Job No.	Dwg. No.	Scale	drawn by:-	checked by:-	Registration No. of Architect
21-CIDCO	01	AS SHOWN	SANTOSH	AR.KAUSHAL JADIA	CA/2002/29450