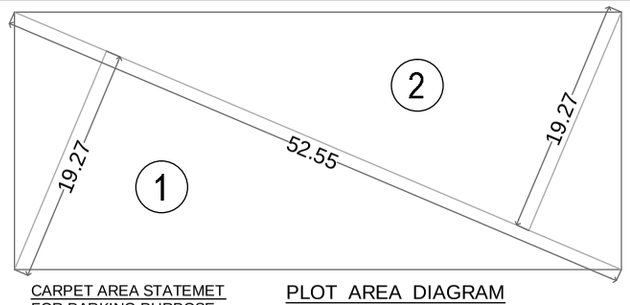

PLOT AREA DIAGRAM

SCALE 1:250

PLOT AREA STATEMENT

1 0.5 X 52.55 X 19.27 = 506.32
2 0.5 X 52.55 X 19.27 = 506.32
TOTAL = 1012.64 SQM

PARKING STATEMENT

AS PER PRESENT POLICY	PARKING REQU.	NO. OF FLATS.	NO. OF PARKINGS REQUIRED
FLATS HAVING CARPET AREA BETWEEN 35 TO 45 Sq. M.	0.25/1T	44	11.00
FLATS HAVING CARPET AREA BETWEEN 45 TO 70 Sq. M.	0.5/1T	18	9.00
ADD 25% GUEST PARKING OF 20.00			5.00
TOTAL NO. OF PARKINGS REQUIRED			25.00
TOTAL NO. OF PARKINGS PROVIDED			58.00

AS PER PROP. AMENDMENT PUT-UP TO U. D. DEPT. FOR THE PLOT AREA ADM. BELOW 1500.00 SQM.	PARKING REQU.	NO. OF FLATS.	NO. OF PARKINGS REQUIRED
FLATS HAVING CARPET AREA LESS THAN 45 Sq. M.	0.25/2T	44	5.50
FLATS HAVING CARPET AREA BETWEEN 45 TO 60 Sq. M.	0.5/2T	18	4.50
ADD 25% GUEST PARKING OF 10.00			2.50
TOTAL NO. OF PARKINGS REQUIRED			12.50 SAY 13.00
TOTAL NO. OF PARKINGS PROVIDED			58.00
BIG CAR			30.00
SMALL CAR			28.00

CARPET AREA STATEMET FOR PARKING PURPOSE

FLAT NO. - 1 (WING - A & B)
2ND TO 6TH FLOOR

LIVING	3.05 X 4.20	=	12.81
KITCHEN	2.92 X 3.13	=	9.14
TOILET	1.81 X 1.20	=	2.17
BED	2.90 X 3.60	=	10.44
TOILET	1.10 X 2.20	=	2.42
BED	2.90 X 3.15	=	9.14
PASS.	3.10 X 0.90	=	2.79
DOORJAM	1.07 X 0.15	=	0.16
	0.90 X 0.15 X 2	=	0.27
	0.75 X 0.15 X 2	=	0.23
TOTAL		=	49.57 SQM.

CARPET AREA STATEMET FOR PARKING PURPOSE

FLAT NO. - 2 & 3 (WING - A & B)
1ST TO 11TH FLOOR

LIVING	2.89 X 4.20	=	12.14
KITCHEN	1.98 X 2.50	=	4.95
TOILET	1.88 X 1.10	=	2.07
BED	2.90 X 3.16	=	9.16
WC	1.20 X 1.10	=	1.32
ROOM	2.90 X 2.74	=	7.95
PASS.	1.25 X 0.90	=	1.13
DOORJAM	1.07 X 0.15	=	0.16
	0.90 X 0.15 X 3	=	0.41
	0.75 X 0.15 X 2	=	0.23
TOTAL		=	39.52 SQM.

FLAT NO. - 2 (WING - A)
ONLY AT 7TH FLOOR

TYPICAL FLAT NO. 2 AREA ADD.		=	39.52
DNG.	1.85 X 2.86	=	5.29
DOORJAM	0.15 X 0.90	=	0.14
TOTAL		=	44.95 SQM.

CARPET AREA STATEMET FOR PARKING PURPOSE

FLAT NO. - 1 (WING - A & B)
8TH TO 11TH FLOOR

LIVING	3.05 X 4.20	=	12.81
KITCHEN	2.92 X 3.13	=	9.14
TOILET	1.81 X 1.20	=	2.17
BED	2.90 X 3.60	=	10.44
TOILET	1.10 X 2.20	=	2.42
BED	2.90 X 3.60	=	10.44
PASS.	3.10 X 0.90	=	2.79
DOORJAM	1.07 X 0.15	=	0.16
	0.90 X 0.15 X 2	=	0.27
	0.75 X 0.15 X 2	=	0.23
TOTAL		=	50.87 SQM.

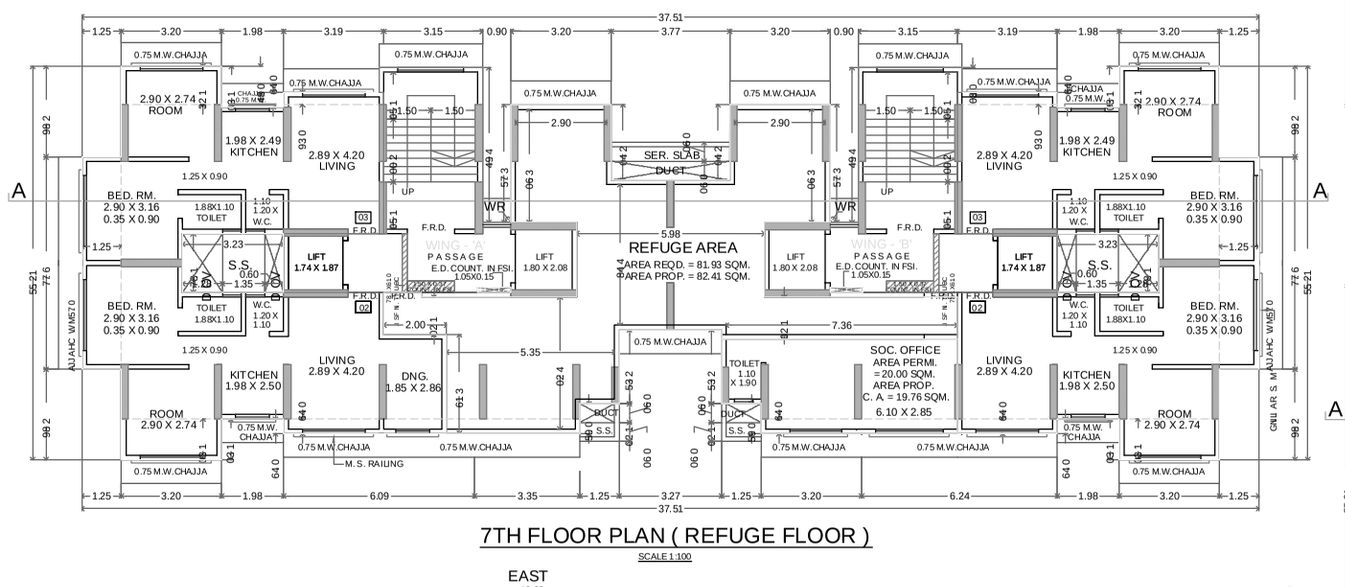

7TH FLOOR PLAN (REFUGE FLOOR)

SCALE 1:100

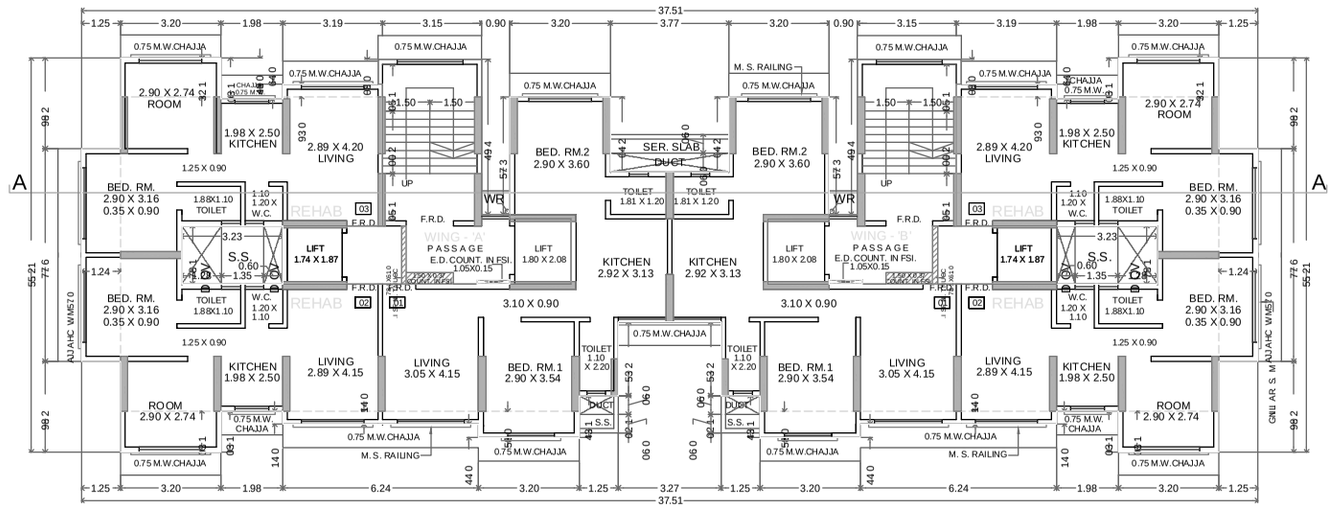

TYPICAL 8TH TO 11TH FLOOR PLAN

SCALE 1:100

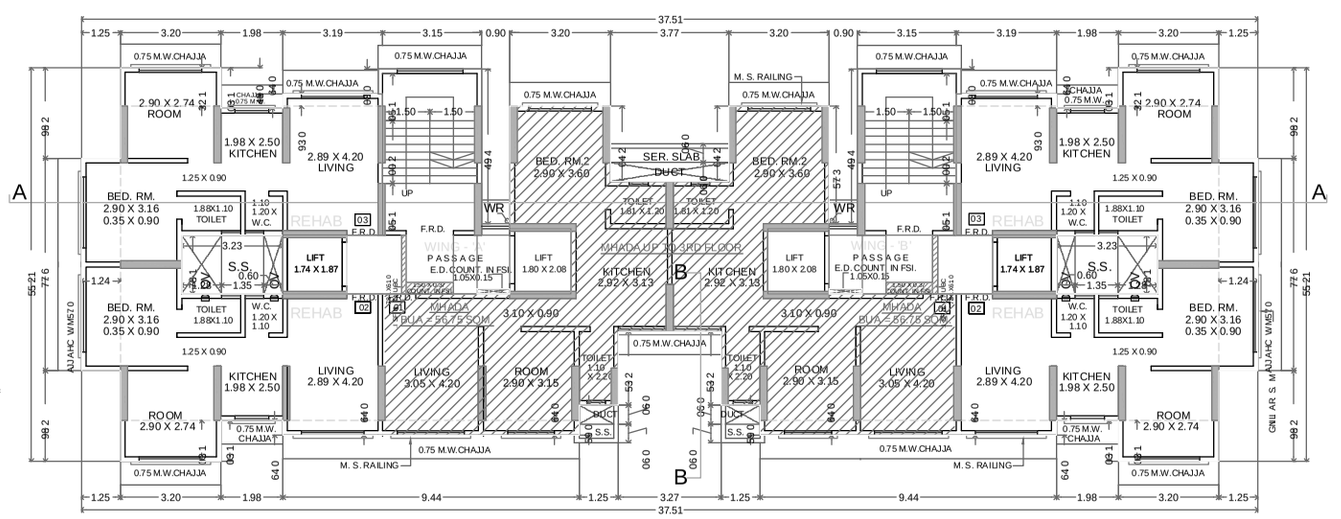

TYPICAL 2ND TO 6TH FLOOR PLAN

SCALE 1:100

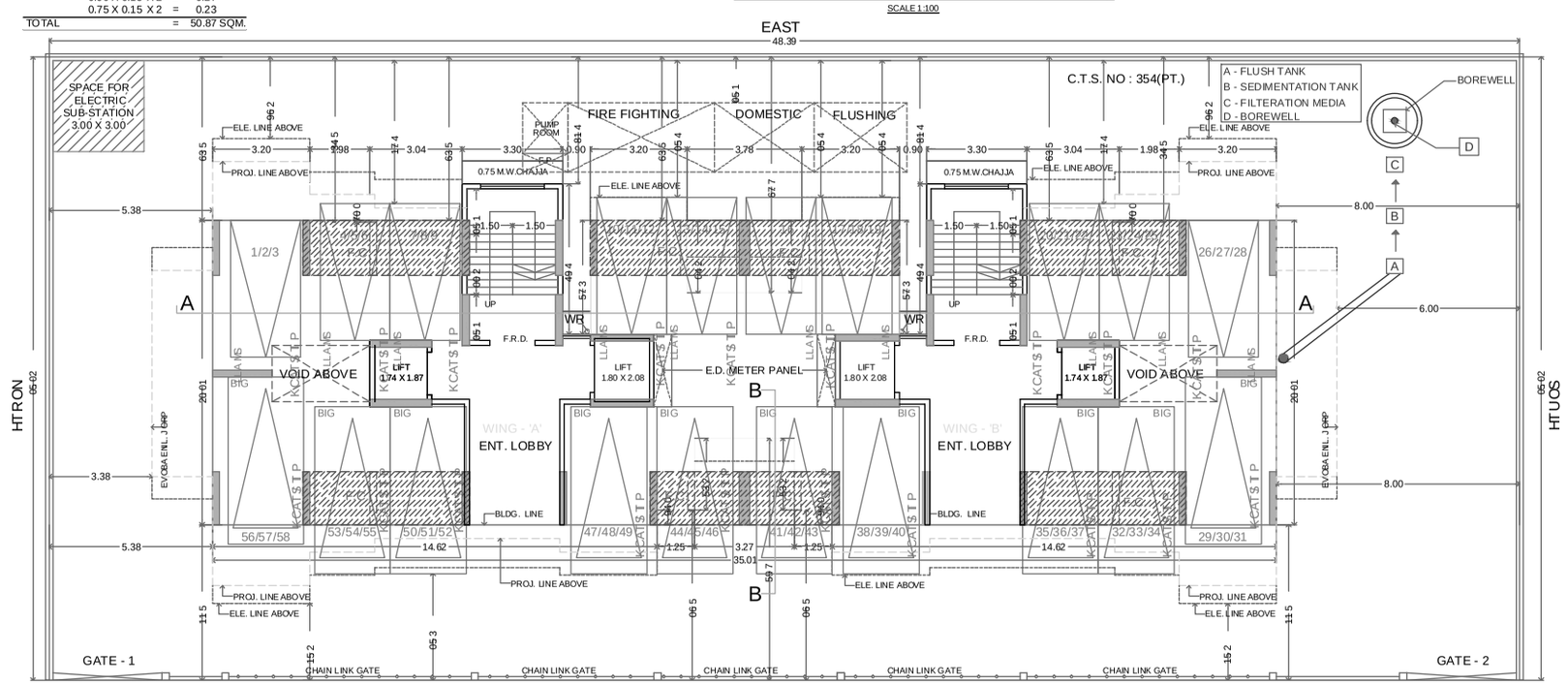

GROUND FLOOR PLAN

SCALE 1:100

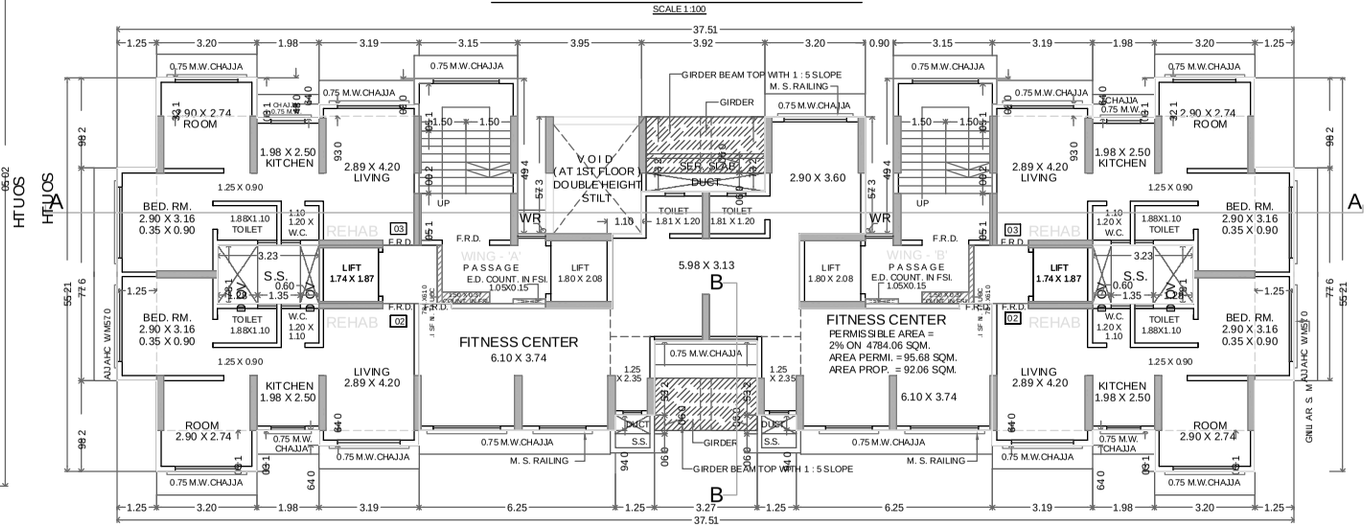

1ST FLOOR PLAN

SCALE 1:100

			PROFORMA - A		
A			PROFORMA A - 2		SQ.MTS.
	1		AREA OF THE PLOT		1012.50
	2		DEDUCTION FOR		
		a	SET BACK AREA		—
		b	PROPOSED ROAD		—
		c	ANY RESERVATION (SUB- PLOT _____)		—
		d	_____% AMENITY SPACE AS PER DCR 56/57 (Sub-plot _____)		—
			OTHER		—
			TOTAL (2 (a+b+c+d+e))		00.00
	3		NET AREA OF PLOT (1-2)		1012.50
	4		**DEDUCTION FOR** RECREATIONAL GROUND / 10% AMENITY SPACE (IF DEDUCTIBLE FOR INDUSTRIAL)		—
	5		NET AREA OF PLOT		1012.50
	6		ADDITION FOR FLOOR SPACE INDEX		
			2 (a) / 2 (b) 100% OF D. P. ROAD / SET BACK		0
	7		TOTAL AREA (5+6)		1012.50
	8		FLOOR SPACE INDEX PERMISSIBLE		2.50
	9		PERMISSIBLE BUA BUA (1012.50 X 2.50)		2531.25
	10		PROPOSED BUA		2531.25
		(a)	RESIDENTIAL		2531.25
		(b)	COMMERCIAL		
	11		FLOOR SPACE INDEX CONSUMED		2.50
B			DETAILS OF F.SI AVAILED AS PER DCR 35 (4)		
	1		PERMISSIBLE FUNGIBLE FSI		
		i	RESIDENTIAL (ON EXISTING AREA = 1.33 & 100 + MHADA F.SI. = 260.30)		559.41
		ii	COMMERCIAL		
			TOTAL FUNGIBLE BUA PERMISSIBLE		559.41
	2		PROPOSED FUNGIBLE FSI		
		i	RESIDENTIAL		
		ii	COMMERCIAL		
			TOTAL FUNGIBLE BUA PERMISSIBLE		
	2	i	TOTAL GROSS PERMISSIBLE BUA 9 + B(1)		3090.66
		ii	TOTAL GROSS PROPOSED BUA 10 + B(2)		
D			TENEMENT STATEMENT		
		(i)	PROPOSED AREA		3058.04
		(ii)	LESS DEDUCTION OF NON RESIDENTIAL AREA (SHOP ETC.)		
		(iii)	AREA AVAILABLE FOR TENEMENTS ((i) MINUS (ii))		
		(iv)	TENEMENTS PERMISSIBLE (DENSITY OF TENEMENTS / HECTARE)		
		(v)	TENEMENTS PROPOSED FOR SALE		22
		(vi)	TENEMENTS EXISTING		40
			TOTAL TENEMENTS ON THE PLOT		62
E			PARKING STATEMENT		
		(i)	PARKING REQUIRED BY REGULATION FOR		
			CAR		20
			SCOOTER / MOTOR CYCLE		-
			OUTSIDERS (VISITORS)		05
		(ii)	COVERED GARAGED PERMISSIBLE		
		(iii)	COVERED GARAGED PROPOSED		NIL
			CAR		47
			SCOOTER / MOTOR CYCLE		-
			OUTSIDERS (VISITORS)		11
			TOTAL PARKING PROVIDED		58
F			TRANSPORT VEHICLES PARKING		
		(i)	SPACES FOR TRANSPORT VEHICLES PARKING REQUIRED BY REGULATIONS		N.A
		(ii)	TOTAL NO. OF TRANSPORT VEHICLES PARKING SPACES PROVIDED		N.A
G			NOTES		

BOUNDARY OF THE PLOT BOUNDED THICK BLACK
PROPOSED WORK SHOWN RED FILLED
"B" DENOTES BALCONY
AREA UNDER SET BACK SHOWN IN BURNT SIENNA
STRUCTURES TO BE DEMO.USHED SHOWN IN HATCHED YELLOW
RECREATION SHOWN IN GREEN
AREA UNDER PROPOSED ROAD SHOWN IN BROWN
DIMENSIONS OF BALCONIES ARE OUTSIDE DIMENSIONS
DRAINAGE SHOWN IN RED DOTTED

CHE / ES / 2042 / S / 337(NEW)

PROFORMA- B ① 2 3

CONTENTS OF THE SHEET

FLOOR PLAN'S, BUILT-UP AREA & PARKING STATEMENT, PLOT AREA DIAGRAM & CALCULATION, BLOCK PLAN, LOCATION PLAN, SECTION THRO. COMPOUND WALL & U. G. WATER TANK.

STAMP OF DATE OF RECEIPT OF PLANS

STAMP OF APPROVAL OF PLANS

APPROVED SUBJECT TO CONDITIONS MENTIONED IN THIS OFFICE LETTER U/NO AUTODCR NO CHE\ES\2042\S\337(NEW)

Oorjyah a Subhash Avasare — S.E.(B.P.)SAT/EAST
Atendra Chhagan Siddhpura — A.E.(B.P.)SAT
Avinash Goraksh Tambewagh — E.E.(B.P.)II.E.S

DESCRIPTION	DATE	SIGNATURE

DESCRIPTION OF PROPOSAL & PROPERTY

PROPOSED BUILDING ON PLOT BEARING C.T.S. NO : 354(PT.) OF VILLAGE HARIYALI TAGORE NAGAR, VIKROLI (E) MUMBAI :- 400083

NAME OF OWNER

MRS. ANURADHA SHARMA, DIRECTOR OF M/S. S.G.E. PROJECT'S C. A. TO VIKHROLI SAIKRUPA CO. OP. HSG. SOC. LTD.

ANNRADHA KHATIRA SHARMA — SIGNATURE OF OWNER

SIGNATURE ,NAME AND ADDRESS OF LICENSED SURVEYOR

ATUL SITUT AND ASSOCIATES
LICENSED SURVEYOR & CIVIL ENGINEERS
603, MAHALAXMI TOWER, CEASER ROAD, AMBOLI, ANDHERI (W), MUMBAI - 400 058. TEL : 2679 3314, 65753840, 65753831

JOB. NO	DRG. NO	SCALE	DATE	DRAWN	CHECKED
A-1611	1	1 : 100	22/12/2016	SATYAVAN	

NORTH

CERTIFICATE FOR AREA

CERTIFIED THAT THE PLOT UNDER REFERENCE WAS G'OT SURVEYED BY ME ON 18.09.2015 AND THE DIMENSIONS OF SIDES ETC. OF PLOT STATED ON PLAN ARE AS ASCERTAINED BY US AND THE AREA SO WORKED OUT TALLIES WITH THE AREA STATED IN DOCUMENT OF OWNERSHIP/T. P. RECORD/LAND RECORDS DEPT./CTS SURVEY RECORD.

Atul Situt — Digitally signed by Atul Vinayak Situt Date: 2016.12.22 17:43:42 +05'30'
Vinayak Situt — Digitally signed by Vinayak Situt (ctrls c=Personal Reason: I.S Atul Situt Location: Date: 2016-12-27 18:42 +05'00'
Licensed Surveyor

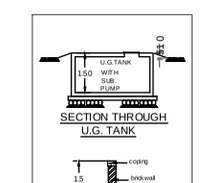

SECTION THROUGH U.G. TANK

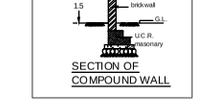

SECTION OF COMPOUND WALL

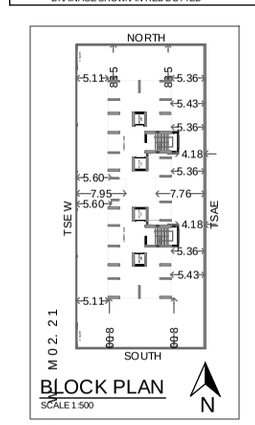

BLOCK PLAN

SCALE 1:500

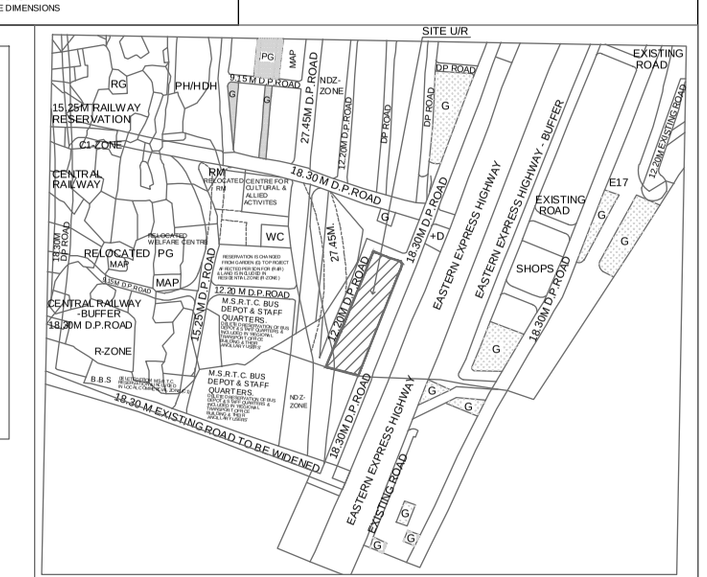

LOCATION PLAN

SCALE - 1 : 4000

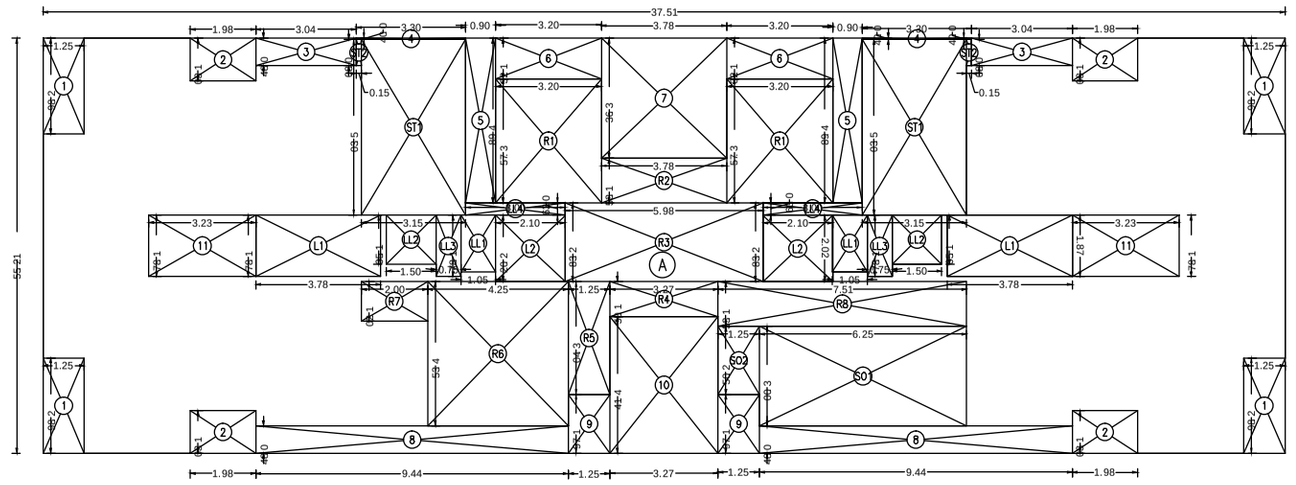

BUILT-UP AREA DIAGRAM : 7TH FLOOR

SCALE 1:100

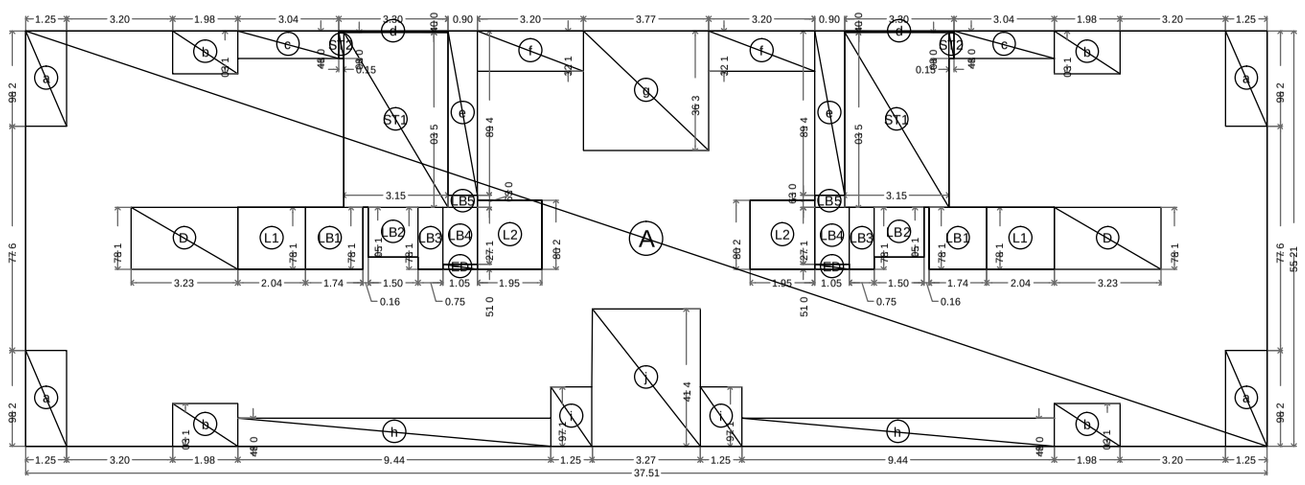

BUILT-UP AREA DIAGRAM : 2ND TO 6TH FLOOR

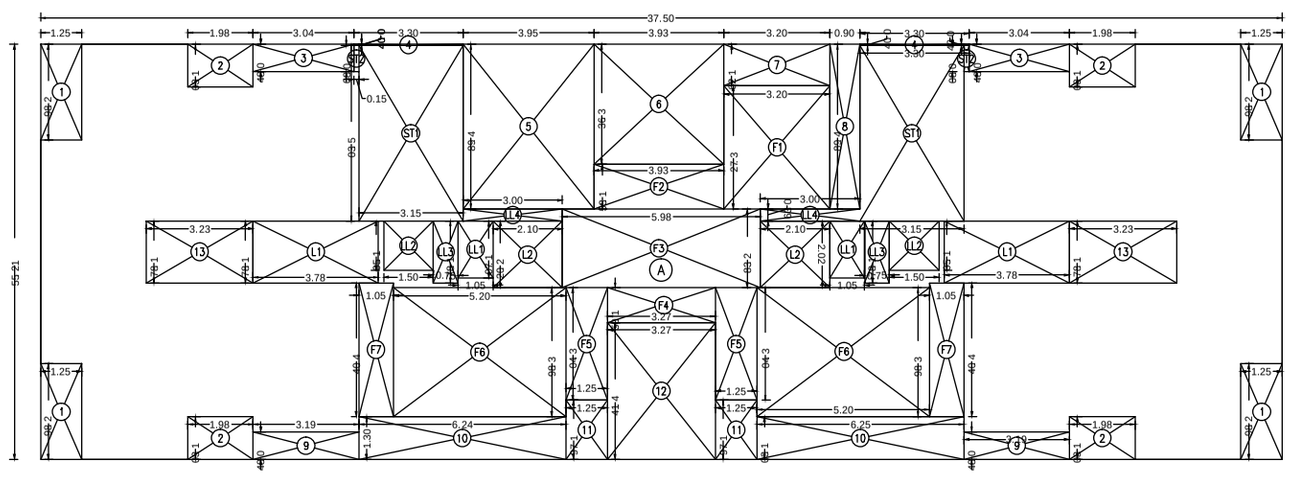

BUILT-UP AREA DIAGRAM : 1ST FLOOR

BUILT UP AREA STATEMENT : -								
FLOOR	Gross BUA	Staircase	Refuge	Fitness Center	Society Office	Excess Refuge	Excess Fitness center	Excess Society Office	TOTAL
FIRST	347.63	69.29		92.32					186.05
SECOND	364.48	67.44	-	-	-	-	-	-	297.04
THIRD	364.48	67.44	-	-	-	-	-	-	297.04
FOURTH	364.48	67.44	-	-	-	-	-	-	297.04
FIFTH	364.48	67.44	-	-	-	-	-	-	297.04
SIXTH	364.48	67.44	-	-	-	-	-	-	297.04
SEVENTH	364.48	69.29	82.04		21.34	26.52	-	-	218.29
EIGHTH	366.33	67.44	-	-	-	-	-	-	298.91
NINTH	366.33	67.44	-	-	-	-	-	-	298.91
TENTH	366.33	67.44	-	-	-	-	-	-	298.91
ELEVENTH	366.33	67.44							
TOTAL	3999.57	745.54	82.04	92.32	21.34	26.52	0.00	0.00	3085.15

BUILT-UP AREA STATEMENT : 7th Floor

AREA OF BLOCK [A]							
(	37.51	X	12.55)			=	470.75 SQ. MT.
ED	1.05	X	0.15	X	2		0.32 SQ. MT.
							471.07
LESS DEDUCTIONS :-							
1	1.25	X	2.89	X	4	=	14.45 SQ. MT.
2	1.98	X	1.30	X	4	=	10.30 SQ. MT.
3	3.04	X	0.84	X	2	=	5.11 SQ. MT.
4	3.30	X	0.04	X	2	=	0.26 SQ. MT.
5	0.90	X	4.98	X	2	=	8.96 SQ. MT.
6	3.20	X	1.23	X	2	=	7.87 SQ. MT.
7	3.78	X	3.63	X	1	=	13.72 SQ. MT.
8	5.11	X	0.81	X	2	=	15.86 SQ. MT.
9	1.25	X	1.79	X	2	=	4.48 SQ. MT.
10	3.27	X	4.14	X	1	=	13.54 SQ. MT.
11	3.23	X	1.87	X	2	=	12.08 SQ. MT.
					(A)	=	**166.63** SQ. MT.
Area of stair case, Lift and Lift lobby							
ST1	3.15	X	5.30	X	2	=	33.39 SQ. MT.
ST2	0.15	X	0.80	X	2	=	0.24 SQ. MT.
L1	3.78	X	1.87	X	2	=	14.14 SQ. MT.
L2	2.1	X	2.02	X	2		8.48 SQ. MT.
LL1	1.05	X	1.79	X	2		3.57 SQ. MT.
LL2	1.50	X	1.50	X	2		4.50 SQ. MT.
LL3	0.75	X	1.87	X	2		2.81 SQ. MT.
LL4	3.00	X	0.36	X	2		2.16 SQ. MT.
					(B)	=	**69.29** SQ. MT.
Excluding Staircase							**295.15**
Refuge area							
R1	3.20	X	3.75	X	2	-	24.00 SQ. MT.
R2	3.78	X	1.35			-	5.10 SQ. MT.
R3	5.98	X	2.38			=	14.23 SQ. MT.
R4	3.27	X	1.05			-	3.43 SQ. MT.
R5	1.25	X	3.40			=	4.25 SQ. MT.
R6	4.25	X	4.35			=	18.49 SQ. MT.
R7	2.00	X	1.20			=	2.40 SQ. MT.
R8	7.31	X	1.33			=	10.14 SQ. MT.
					(D)	=	**82.04** SQ. MT.
Area of sec. Office							
SO1	6.26	X	3.00			=	18.78 SQ. MT.
SO2	1.25	X	2.05			=	2.56 SQ. MT.
					(E)	=	**21.34** SQ. MT.
Total Deduction							
(A + B + C + D + E)						-	**259.30** SQ. MT.
Built up area per floor							
(	471.07	-	259.30)			=	**191.77** SQ. MT.

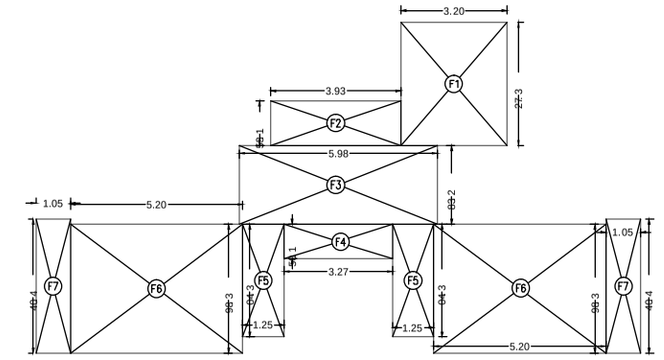

FITNESS CENTER AREA DIAGRAM : PROP. AT 1ST FLOOR

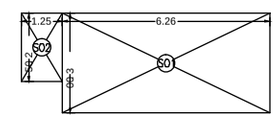

SOC. OFFICE AREA DIAGRAM : PROP. AT 7TH FLOOR

SOCIETY OFFICE AREA STATEMENT

AT 7TH FLOOR					
A	7.31 X	3.00		=	**22.53** SQ. MT.
LESS DEDUCTIONS :					
1	6.26	X	3.00	X	= 18.78 SQ. MT.
2	1.25	X	2.05	X	= 2.56 SQ. MT.
				(A)	= **21.34** SQ. MT.
Total Deduction					
(A)					= **21.34** SQ. MT.
PROPOSEDD SOCIETY OFFICE AT 1ST FLOOR					
AREA PERMISSIBLE = 20.00 SQM					
AREA PROPOSED = 21.34 SQM					

BUILT-UP AREA STATEMENT : 2nd to 6th

AREA OF BLOCK [A]							
(	37.51	X	12.55)			-	**470.75** SQ. MT.
ED	1.05	X	0.15	X	2	=	0.32 SQ. MT.
							471.07
LESS DEDUCTIONS :-							
a	1.25	X	2.89	X	4	=	14.45 SQ. MT.
b	1.98	X	1.30	X	4	=	10.30 SQ. MT.
c	3.04	X	0.84	X	2	=	5.11 SQ. MT.
d	3.30	X	0.04	X	2	=	0.26 SQ. MT.
e	0.90	X	4.98	X	2	=	8.96 SQ. MT.
f	3.20	X	1.23	X	2	=	7.87 SQ. MT.
g	3.77	X	3.63	X	1	=	13.69 SQ. MT.
h	0.44	X	0.84	X	2	-	15.86 SQ. MT.
i	1.25	X	1.79	X	2	=	4.48 SQ. MT.
j	3.27	X	4.14	X	1	=	13.54 SQ. MT.
D	3.23	X	1.87	X	2	=	12.08 SQ. MT.
					(A)	=	**106.59** SQ. MT.
Area of stair case, Lift and Lift lobby							
ST1	3.15	X	5.30	X	2	-	33.39 SQ. MT.
ST2	0.15	X	0.80	X	2	=	0.24 SQ. MT.
L1	2.04	X	1.87	X	2	=	7.63 SQ. MT.
L2	1.95	X	2.08	X	2		8.11 SQ. MT.
LL1	1.74	X	1.87	X	2		6.51 SQ. MT.
LL2	1.50	X	1.50	X	2		4.50 SQ. MT.
LL3	0.75	X	1.87	X	2		2.81 SQ. MT.
LL4	1.05	X	1.72	X	2		3.61 SQ. MT.
LL5	0.9	X	0.36	X	2		0.65 SQ. MT.
					(B)	=	**67.44** SQ. MT.
Total Deduction							
(A + B)						-	**174.03** SQ. MT.
Built up area per floor							
(	471.07	-	174.03)			=	**297.04 SQ. MT.**

BUILT-UP AREA STATEMENT : 1st Floor

AREA OF BLOCK [A]							
(	37.51	X	12.55)			=	**470.75** SQ. MT.
ATD COLUMN	= 0.23	X	1.81	X	2	=	**0.83** SQ. MT.
ED	1.05	X	0.15	X	2	=	0.32 SQ. MT.
							471.90
LESS DEDUCTIONS :-							
1	1.25	X	2.89	X	4	=	14.45 SQ. MT.
2	1.98	X	1.30	X	4	=	10.30 SQ. MT.
3	3.04	X	0.84	X	2	=	5.11 SQ. MT.
4	3.30	X	0.04	X	2	=	0.26 SQ. MT.
5	3.95	X	4.98	X	1	=	19.67 SQ. MT.
6	3.93	X	3.63	X	1	=	14.27 SQ. MT.
7	3.20	X	1.26	X	1	=	4.03 SQ. MT.
8	0.90	X	4.98	X	1	=	4.48 SQ. MT.
9	3.19	X	0.84	X	2	=	5.36 SQ. MT.
10	6.25	X	1.30	X	2	=	16.25 SQ. MT.
11	1.25	X	1.79	X	2	=	4.48 SQ. MT.
12	3.27	X	4.17	X	1	=	13.54 SQ. MT.
13	3.23	X	1.87	X	2	=	12.08 SQ. MT.
					(A)	=	**124.27** SQ. MT.
Gross BUA							**347.63** SqM
Area of stair case, Lift and Lift lobby							
ST1	3.15	X	5.30	X	2	-	33.39 SQ. MT.
ST2	0.15	X	0.80	X	2	=	0.24 SQ. MT.
L1	3.78	X	1.87	X	2	=	14.14 SQ. MT.
L2	2.1	X	2.02	X	2		8.48 SQ. MT.
LL1	1.05	X	1.79	X	2		3.57 SQ. MT.
LL2	1.50	X	1.50	X	2		4.50 SQ. MT.
LL3	0.75	X	1.87	X	2		2.81 SQ. MT.
LL4	3.00	X	0.36	X	2		2.16 SQ. MT.
					(B)	=	**69.29** SQ. MT.
Area of Fitness Center							
FC1	3.20	X	3.72	X	1	=	11.90 SQ. MT.
FC2	3.93	X	1.35	X	1	=	5.31 SQ. MT.
FC3	5.98	X	2.38	X	1	=	14.23 SQ. MT.
FC4	3.27	X	1.05	X	1	=	3.43 SQ. MT.
FC5	1.25	X	3.40	X	2	=	8.50 SQ. MT.
FC6	5.20	X	3.89	X	2	=	40.46 SQ. MT.
FC7	1.05	X	4.04	X	2	=	8.48 SQ. MT.
					(C)	=	**92.32** SQ. MT.
Total Deduction							
(A + B + C)						=	**285.87** SQ. MT.
Built up area per floor							
(	471.9	-	285.87)			-	**186.03 SQ. MT.**

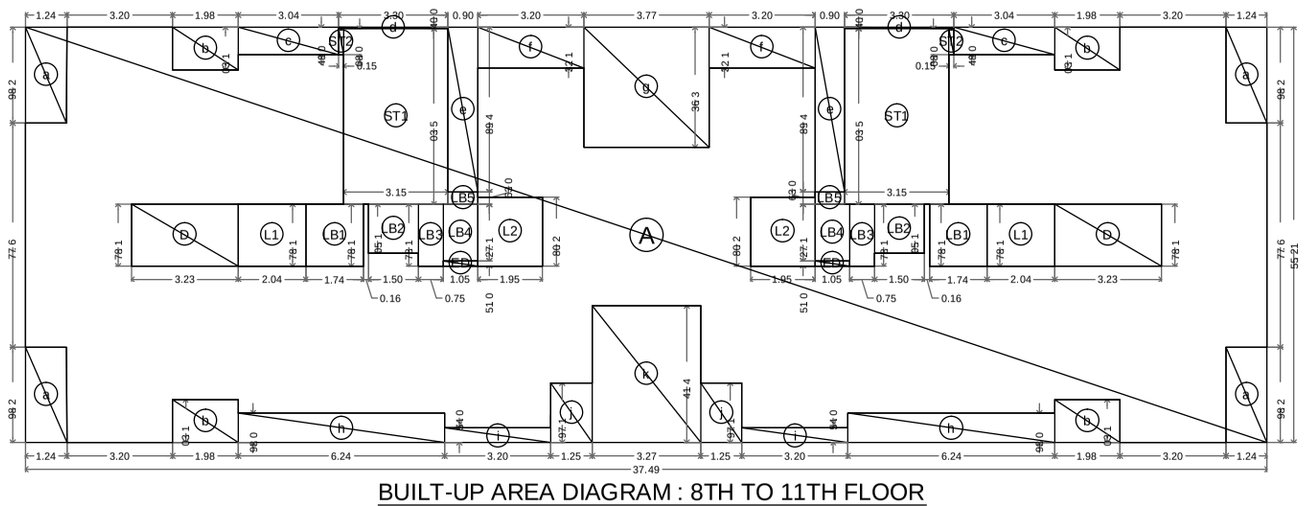

BUILT-UP AREA DIAGRAM : 8TH TO 11TH FLOOR

SCALE 1:100

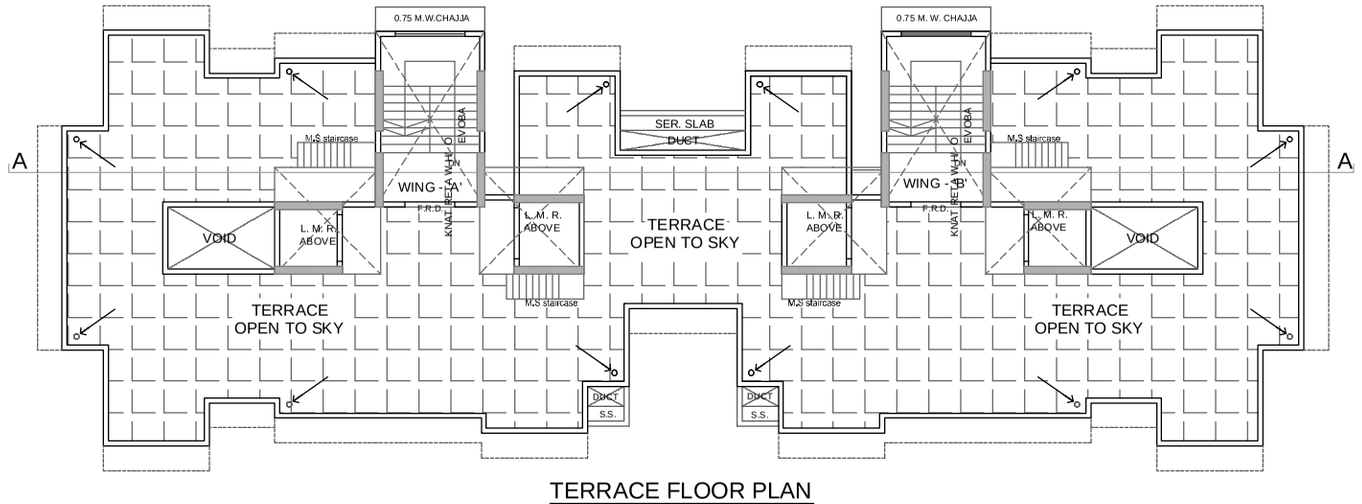

TERRACE FLOOR PLAN

SCALE 1:100

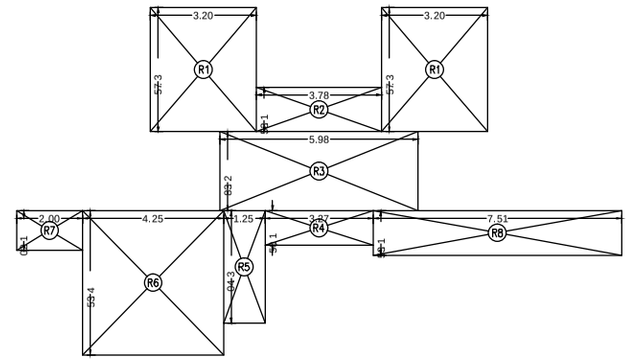

REFUGE AREA DIAGRAM : PROP. AT 7TH FLOOR

REFUGE AREA STATEMENT

R1	3.20	X	3.75	X	2	=	24.00 SQ. MT.
R2	3.78	X	1.35			=	5.10 SQ. MT.
R3	5.98	X	2.38			=	14.23 SQ. MT.
R4	3.27	X	1.05			=	3.43 SQ. MT.
R5	1.25	X	3.40			=	4.25 SQ. MT.
R6	4.25	X	4.35			=	18.49 SQ. MT.
R7	2.00	X	1.20			=	2.40 SQ. MT.
R8	7.31	X	1.33			=	10.14 SQ. MT.
					(D)	=	**82.04** SQ. MT.
PROPOSED REFUGE AREA AT 7TH FLOOR							
REQ. 4% OF 7TH TO 11TH FLOOR B.U.A.							
= 4% ON (892.14 + 298.03 X 4)						=	38.82
= 4% of 1388 SQM.							
REFUGE AREA PROPOSED							82.04 SqM
Excess Refuge							26.52 SqM

ELECTRIC DUCT AREA DIAGRAM

SCALE 1: 100

ELEC. DUCT AREA STATEMENT

1ST TO 17TH FLOOR (WING - 'A' & 'B')

ED	1.05	X 0.15	=	0.16
TOTAL			=	0.16 SQM
NET BUILT UP AREA / FLOOR				
0.16	X 2		=	0.32 SQM

FITNESS CENTRE AREA STATEMENT : -

AT 1st Floor

LESS DEDUCTIONS :-							
1	3.20	X	3.72			=	11.90 SQ. MT.
2	3.93	X	1.35			=	5.31 SQ. MT.
3	5.98	X	2.38			=	14.23 SQ. MT.
4	3.27	X	1.05			=	3.43 SQ. MT.
5	1.25	X	3.40	x	2	=	8.50 SQ. MT.
6	5.20	X	3.89	x	2	=	40.46 SQ. MT.
7	1.05	X	4.04	x	2	=	8.48 SQ. MT.
						=	**92.32** SQ. MT.
Total Deduction							
Fitness Centre as per Plan						=	92.32
						=	**92.32** SQ. MT.

PROP. FITNESS CENTER AT 1ST FLOOR

REQ.2% ON 4784.06 SQM.

= AREA PERMISSIBLE = 95.68 SQM

= AREA PROPOSED = 92.32 SQM

BUILT-UP AREA STATEMENT : -

Typical 8th to 11th floor

AREA OF BLOCK [A]							
(	37.51	X	12.55)			=	**470.75** SQ. MT.
ED	1.05	X	0.15	X	2	=	0.32 SQ. MT.
							471.07 SQ. MT.
LESS DEDUCTIONS :-							
a	1.25	X	2.89	X	4	=	14.45 SQ. MT.
b	1.98	X	1.30	X	4	=	10.30 SQ. MT.
c	3.04	X	0.84	X	2	=	5.11 SQ. MT.
d	3.30	X	0.04	X	2	=	0.26 SQ. MT.
e	0.90	X	4.98	X	2	=	8.96 SQ. MT.
f	3.20	X	1.23	X	2	=	7.87 SQ. MT.
g	3.77	X	3.63	X	1	=	13.69 SQ. MT.
h	6.54	X	0.84	X	2	=	11.10 SQ. MT.
i	3.30	X	0.43	X	2	=	2.84 SQ. MT.
j	1.25	X	1.79	X	2	=	4.48 SQ. MT.
k	3.27	X	4.14	X	1	=	13.54 SQ. MT.
D	3.23	X	1.87	X	2	=	12.08 SQ. MT.
						(A)	= **104.72** SQ. MT.
Staircase & Lift Area							
ST1	3.15	X	5.30	X	2	=	33.39 SQ. MT.
ST2	0.15	X	0.80	X	2	=	0.24 SQ. MT.
L1	2.04	X	1.87	X	2	=	7.63 SQ. MT.
L2	1.95	X	2.08	X	2	=	8.11 SQ. MT.
LL1	1.74	X	1.87	X	2	=	6.51 SQ. MT.
LL2	1.50	X	1.50	X	2	=	4.50 SQ. MT.
LL3	0.75	X	1.87	X	2	=	2.81 SQ. MT.
LL4	1.05	X	1.72	X	2	=	3.61 SQ. MT.
LL5	0.90	X	0.36	X	2	=	0.65 SQ. MT.
						(B)	= **67.46** SQ. MT.
Total Deduction							
(A + B)						=	**172.16** SQ. MT.
Built up area per floor							
(	471.07	-	172.16)			=	**298.91 SQ. MT.**

CHE / ES / 2042 / S / 337(NEW)

P R O F O R M A - B 1 2 3

CONTENTS OF THE SHEET

BUILT-UP AREA, STAIR CASE AREA, REFUGE AREA & FITNESS CENTER DIAGRAM & CALCULATION, STAIR CASE AREA DIAGRAM & CALCULATION.

STAMP OF DATE OF RECEIPT OF PLANS

STAMP OF APPROVAL OF PLANS

APPROVED SUBJECT TO CONDITIONS MENTIONED IN THIS OFFICE LETTER U/NO AUTODCR NO CHE/ES/2042/S/337(NEW).

Digitally signed by Atul Vinayak Situt DN: c=IN,st=Maharashtra,l=Navi Mumbai,o=Personal,ou=Personal,2.5.4.17=400708,serialNumber=7d1a0a0a0

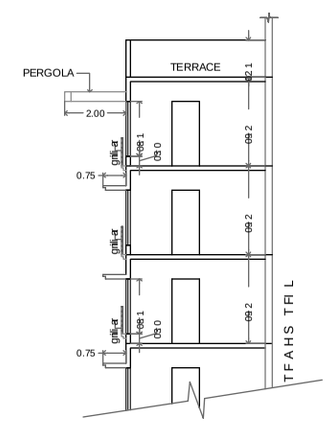

DETAILS SECTION THROUGH PERGOLA

SCALE 1:100

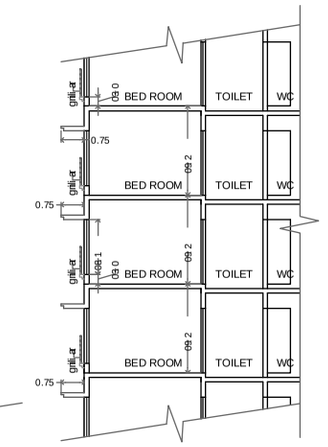

DETAILS SECTION THROUGH CHAJJA

SCALE 1:100

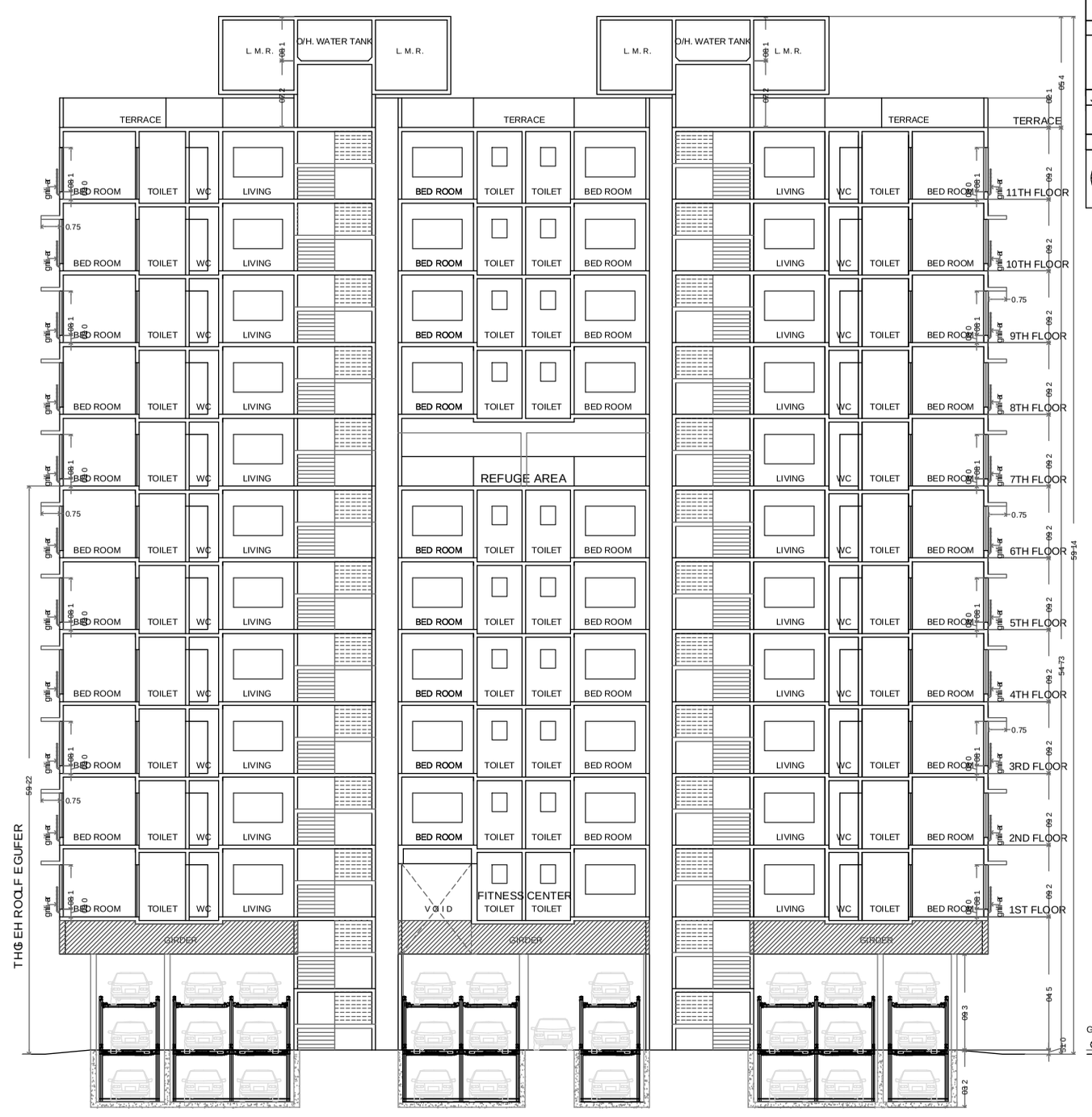

SECTION : A-A

SCALE 1:100

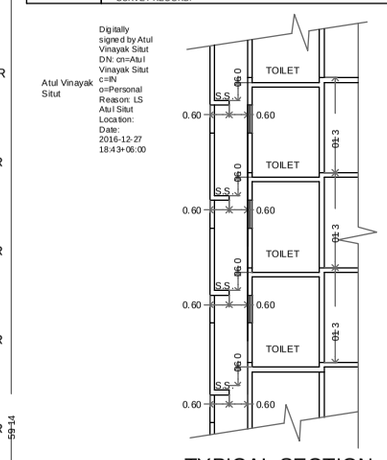

TYPICAL SECTION THROUGH TOILET

SCALE 1:100

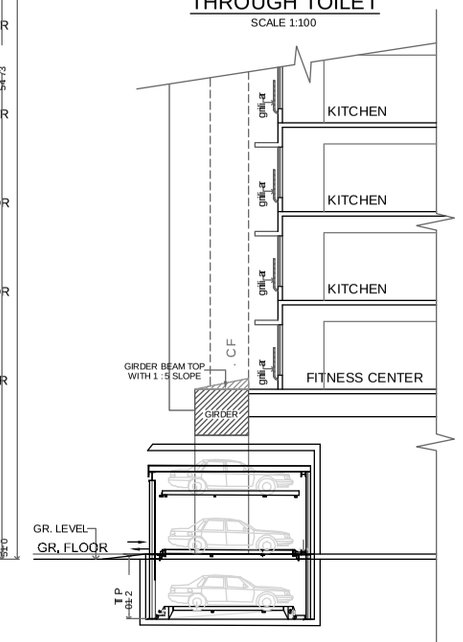

SECTION : B-B

SCALE 1:100

CHE / ES / 2042 / S / 337(NEW)

P R O F O R M A - B 1 2 3

CONTENTS OF THE SHEET

SECTION,S.

STAMP OF DATE OF RECEIPT OF PLANS

STAMP OF APPROVAL OF PLANS

APPROVED SUBJECT TO CONDITIONS MENTIONED IN THIS OFFICE LETTER U/NO. AUTO/DCR NO CHE\ES\2042\S\337(NEW)

Dorjyash S Subhash Avasare — S.E.(B.P)SMT/EAST

Jitendra Chhaganlal Siddhpura — A.E.(B.P)SMT

Avinash Goraksh Tambewagh — E.E.(B.P)-II,E.S

DESCRIPTION	DATE	SIGNATURE

DESCRIPTION OF PROPOSAL & PROPERTY

PROPOSED BUILDING ON PLOT BEARING C.T.S. NO : 354(PT) OF VILLAGE HARIYALI TAGORE NAGAR, VIKROLI (E) MUMBAI :- 400083

NAME OF OWNER

MRS. ANURADHA SHARMA DIRECTOR OF M/S. S.G.E. PROJECT'S C. A. TO VIKHROLI SAIKRUPA CO. OP. HSG. SOC. LTD.

ANURADHA KWATRA SHARMA

SIGNATURE OF OWNER

SIGNATURE ,NAME AND ADDRESS OF LICENSED SURVEYOR

ATUL SITUT AND ASSOCIATES

LICENSED SURVEYOR & CIVIL ENGINEERS

603, MAHALAXMI TOWER, CEASER ROAD, AMBOLI, ANDHERI (W), MUMBAI : 400 058. TEL : 2679 3314, 65753840, 65753831

JOB. NO	DRG. NO	SCALE	DATE	DRAWN	CHECKED
A-1611	3	1 : 100	22/12/2016	SATYAVAN	

NORTH

CERTIFICATE FOR AREA

CERTIFIED THAT THE PLOT UNDER REFERENCE WAS GOT SURVEYED BY ME ON AND THE DIMENSIONS OF SIDES ETC. OF PLOT STATED ON PLAN ARE AS MEASURED ON SITE AND THE AREA SO WORKED OUT TALLIES WITH THE AREA STATED IN DOCUMENT OF OWNERSHIP AT THE RECORD/LAND RECORDS DEPTT./CITY SURVEY RECORD.

Atul Vinayak Situt

Atul Vinayak Situt

Digitally signed by Atul Vinayak Situt
DN: cn=Atul Vinayak Situt, c=IN, o=Personal, Reason: I S Atul Situt, Location: India
2016-12-27 18:43:+06:00