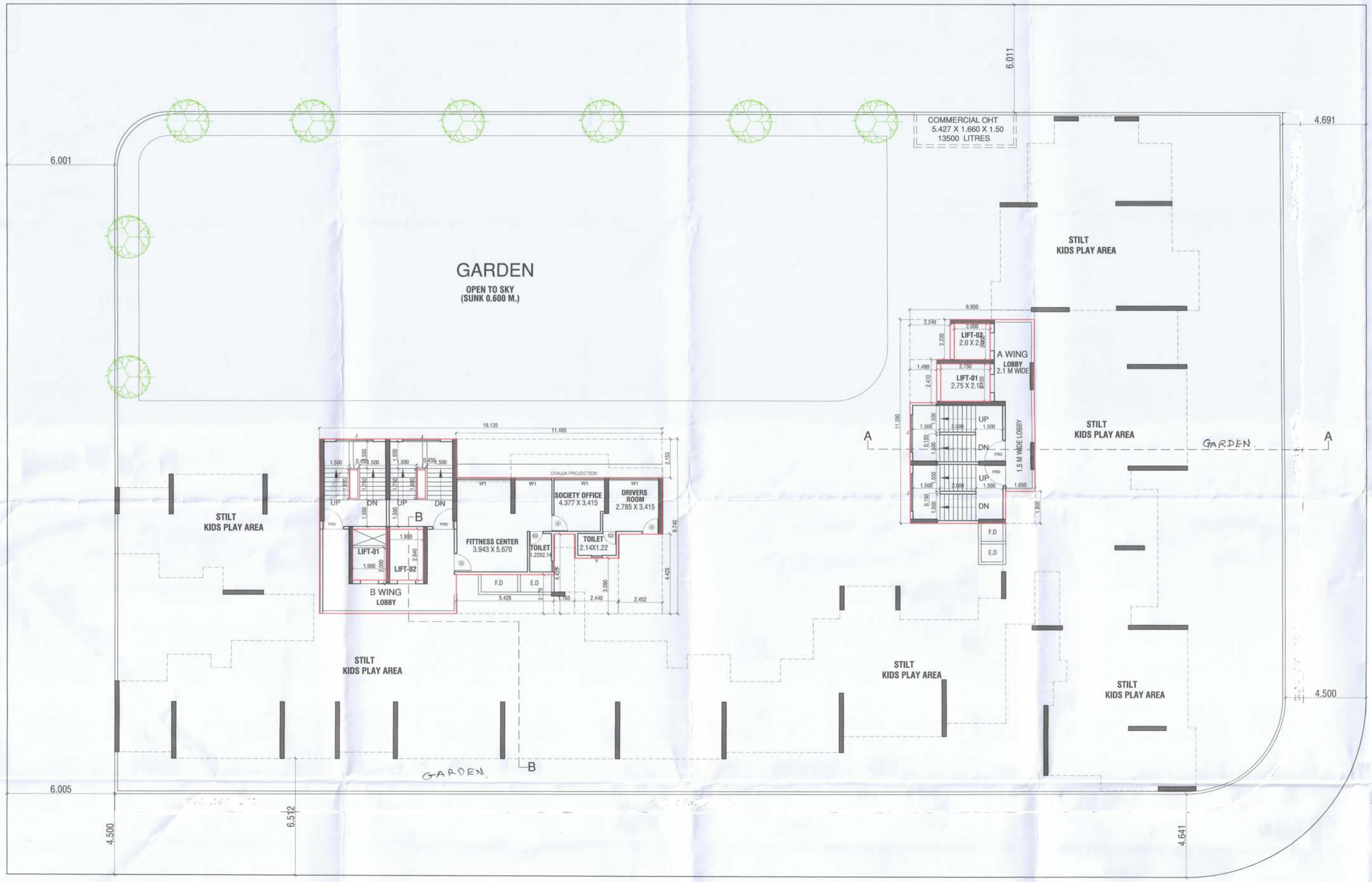

SECOND FLOOR PLAN

BUILT UP AREA CALCULATION

SECOND FLOOR RESIDENTIAL									
A	19.135	X	9.740	X	1 NO	=	186.375	SQ.MT.	
B	6.950	X	11.390	X	1 NO	=	79.161	SQ.MT.	
					TOTAL ADDITION	=	265.536	SQ.MT.	X

DEDUCTIONS

1	11.485	X	2.153	X	1 NO	=	24.727	SQ.MT.	
2	0.450	X	1.600	X	2 NOS	=	1.440	SQ.MT.	
3	1.900	X	2.840	X	2 NOS	=	10.792	SQ.MT.	
4	5.428	X	2.170	X	1 NO	=	11.779	SQ.MT.	
5	1.165	X	4.425	X	1 NO	=	5.155	SQ.MT.	
6	2.440	X	3.090	X	1 NO	=	7.540	SQ.MT.	
7	2.452	X	4.425	X	1 NO	=	10.850	SQ.MT.	
8	2.240	X	2.230	X	1 NO	=	4.995	SQ.MT.	
9	2.000	X	2.000	X	1 NO	=	4.000	SQ.MT.	
10	1.490	X	2.410	X	1 NO	=	3.591	SQ.MT.	
11	2.750	X	2.100	X	1 NO	=	5.775	SQ.MT.	
12	1.650	X	1.800	X	1 NO	=	2.970	SQ.MT.	
					TOTAL DEDUCTION	=	93.614	SQ.MT.	Y1
TOTAL BUILT UP AREA [X - Y1]						=	171.922	SQ.MT.	X1

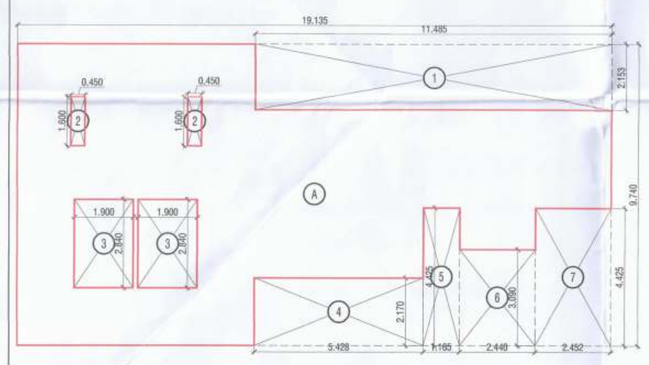

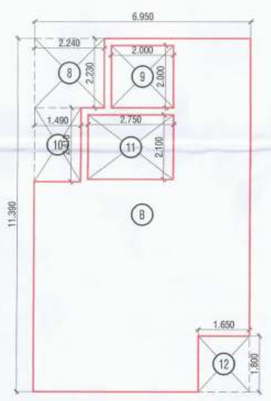

AREA DIAGRAM FOR 2ND FLOOR

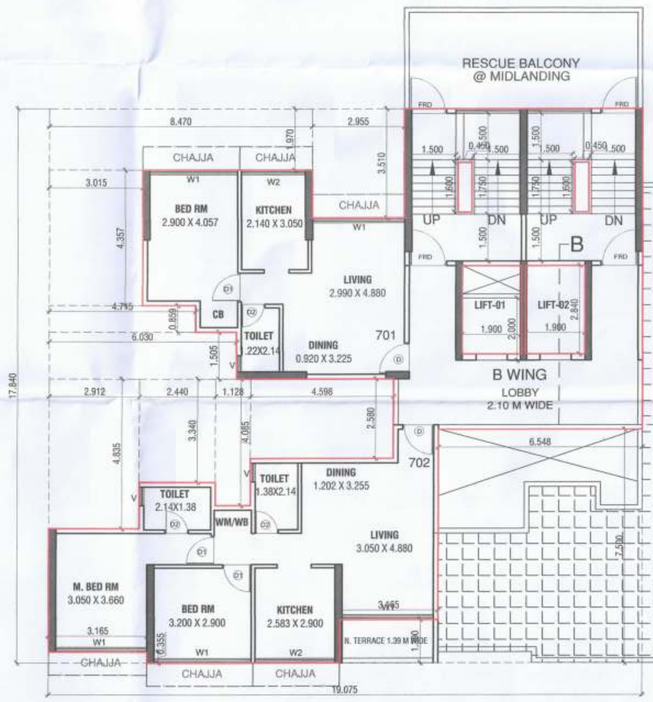

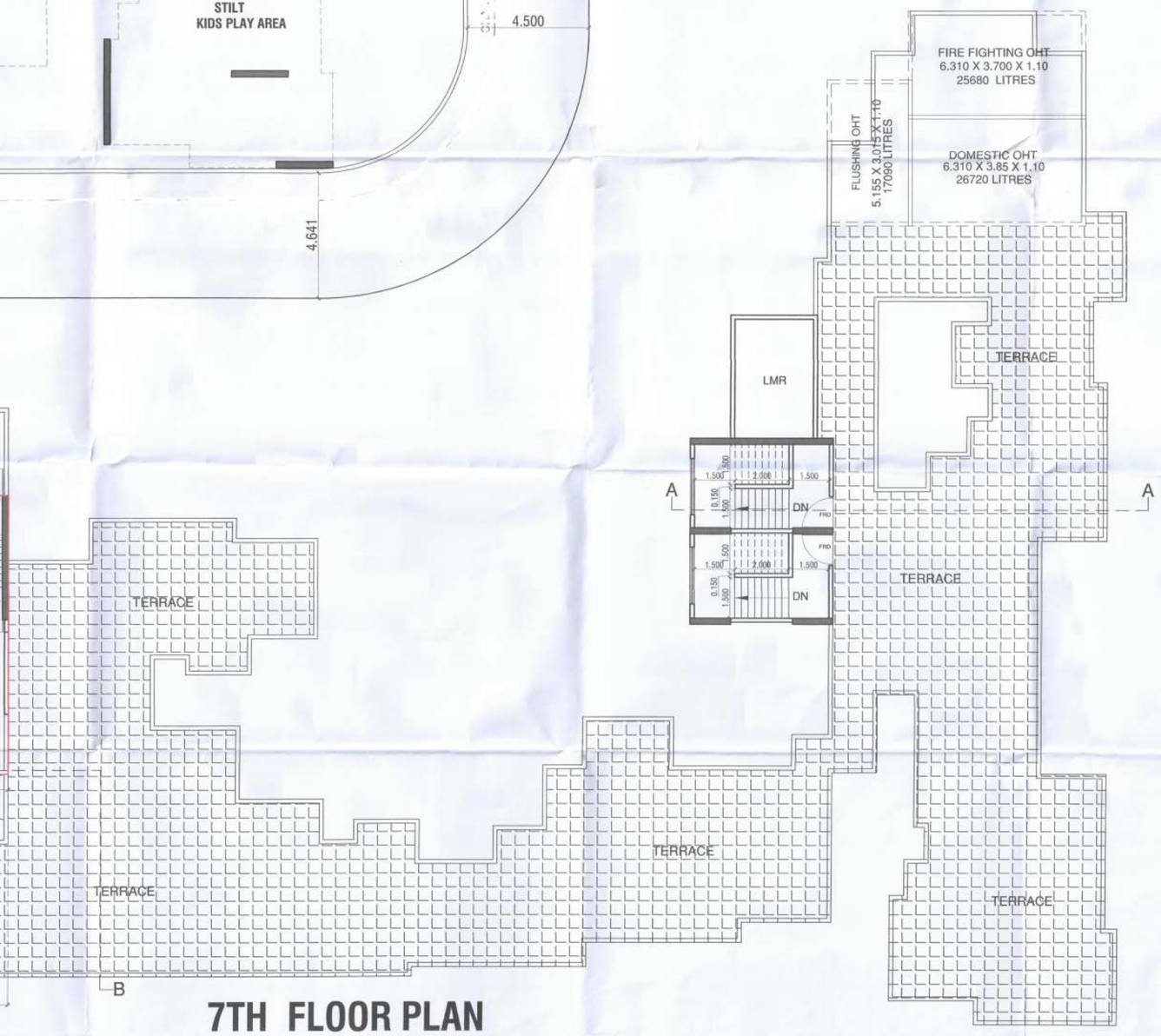

7TH FLOOR PLAN

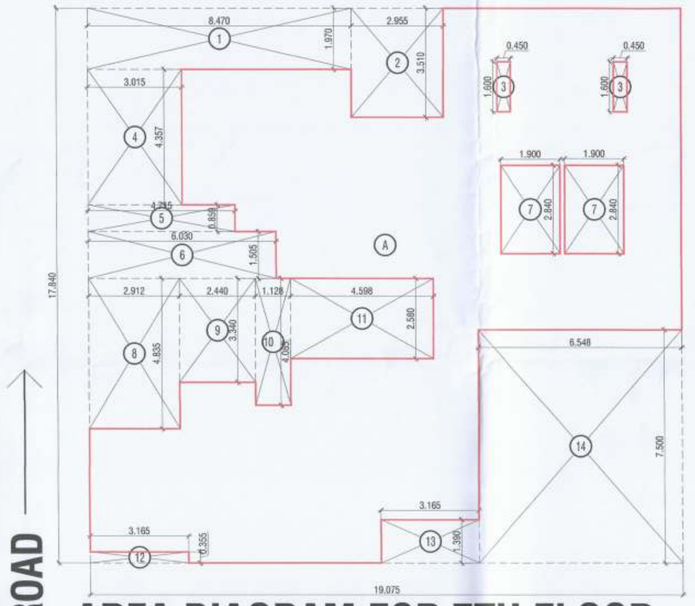

AREA DIAGRAM FOR 7TH FLOOR

BUILT UP AREA CALCULATION

SEVENTH FLOOR									
A	19.075	X	17.840	X	1 NO	=	340.298	SQ.MT.	
					TOTAL ADDITION	=	340.298	SQ.MT.	X

DEDUCTIONS

1	8.470	X	1.970	X	1 NO	=	16.686	SQ.MT.	
2	2.955	X	3.510	X	1 NO	=	10.372	SQ.MT.	
3	0.450	X	1.600	X	2 NOS	=	1.440	SQ.MT.	
4	3.015	X	4.357	X	1 NO	=	13.136	SQ.MT.	
5	4.715	X	0.859	X	1 NO	=	4.050	SQ.MT.	
6	6.030	X	1.505	X	1 NO	=	9.075	SQ.MT.	
7	1.900	X	2.840	X	2 NOS	=	10.792	SQ.MT.	
8	2.912	X	4.835	X	1 NO	=	14.080	SQ.MT.	
9	2.440	X	3.340	X	1 NO	=	8.150	SQ.MT.	
10	1.128	X	4.085	X	1 NO	=	4.608	SQ.MT.	
11	4.598	X	2.580	X	1 NO	=	11.863	SQ.MT.	
12	3.165	X	0.355	X	1 NO	=	1.124	SQ.MT.	
13	3.165	X	1.390	X	1 NO	=	4.398	SQ.MT.	
14	6.548	X	7.500	X	1 NO	=	49.110	SQ.MT.	
					TOTAL DEDUCTION	=	158.874	SQ.MT.	Y1
TOTAL BUILT UP AREA [X - Y1]						=	181.424	SQ.MT.	X1

CONTENT OF SHEET	SHEET- 04 / 05
SECOND & SEVENTH FLOOR PLAN BUA DIAGRAM AND STATEMENT	

APPROVAL STAMP OF P.M.C.

पनवेल महानगरपालिका
मौजे- शीव पनवेल पेठ्कर २८
पेठ्कर मौजेच भू.क्र./स.नं./हि.नं./गाव नं.क्र./गट क्र./
भू.क्र. / ९५ मधे नियोजित बिल्डिंग/
फेडरशन/कॉलोनी/व्यापारी संकुलाच्या नकाशांस वा
कार्यालयाचे पा.क्र./पत्रावरील/ ३८३५/ दि. ७
२०२५ /२०२५ दिनांक ०६/०५/२०२५
मंजीत आहे. सदरील अभिन्यास राहून नकाशांच सात रस्त्याचे
कुलका कल्पाचुसार संपूर्ण.

मा. आयुक्त यांचे मंजूरी नुसार
सहायक संचालक, नगररचना
पनवेल महानगरपालिका

PANVEL MUNICIPAL CORPORATION
पनवेल महानगरपालिका
पनवेल-रायगड
PANVEL-RAIGAD

DESCRIPTION OF CC.
PROPOSED RESIDENTIAL CUM COMMERCIAL BUILDING ON PLOT NO.35, SECTOR - 17, NEW PANVEL(W), NAVI MUMBAI

Certificate of Area
certified that the plot under reference was surveyed by me on .....and the dimensions of sides etc., of plot started on plan are as measured on site and the area so worked out tallies with the area stated in document of ownership / T.P.Scheme Records / Land Records Department / city survey records.

Signature
SATISH V. AHUJA(REG. NO.:CA/93/16602)

SATISH AHUJA ASSOCIATES ARCHITECT CA/93/16602

Owner's declaration
I/we undersigned hereby confirm that/we would abide by plan approved by Authority/Collector. I/We would execute the structure as per approved plans. Also I/We would execute the work under supervision of proper technical person so as to ensure the quality and safety at the work site.

For NEELKANTH INFRACON
Partner
M/S NEELKANTH INFRACON

NORTH	
SCALE	:- 1:100
DATE	:- 09-04-2022
DRN. BY.	:- AYAAN
CHKD. BY	:- S.V. AHUJA
DRG. No	:- 04

NAME & ADDRESS OF ARCHITECT

SATISH AHUJA ARCHITECTS
ASHIANA SOCIETY, OPP MCDONALDS
C-WING, SECTOR 17, VASHI , NAVI MUMBAI
PH. NO- 2789 8644, 6781 0444,