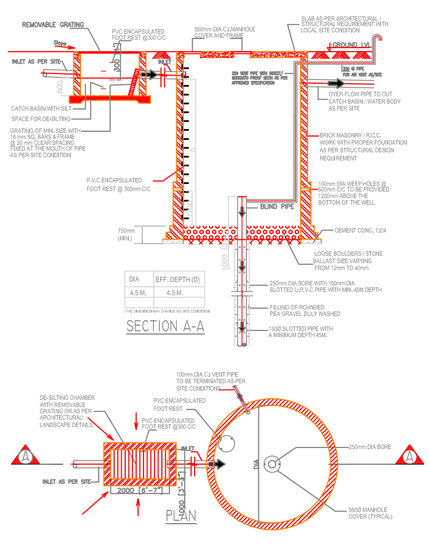

RAIN WATER HARVESTING DETAIL

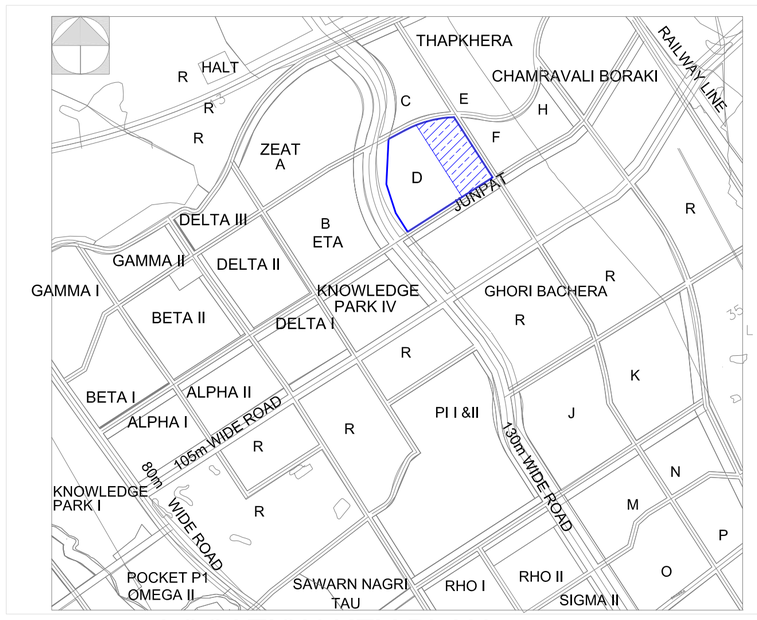

LOCATION KEY PLAN

FAR CALCULATION

TOWER		T3 E		T4 E		T5 D		T6 D		T7 B1		T8 B		T10 D		T11 D		T12 E		TOTAL	
UNITS		108		108		100		100		199		199		100		100		96			
MODULE		FAR	UNITS	FAR	UNITS	FAR	UNITS	FAR	UNITS	FAR	UNITS	FAR	UNITS	FAR	UNITS	FAR	UNITS	FAR	UNITS	UNITS	TOTAL FAR
S.NO	FLOORS																				
1	GROUND	564.29	4	564.30	4	430.56	4	431.95	4	445.01	7	491.45	7	431.95	4	430.56	4	564.30	4	42	4354.37
2	1st FLOOR	539.35	4	539.35	4	405.80	4	405.80	4	420.64	8	468.17	8	405.80	4	405.80	4	539.35	4	44	4130.06
3	2nd FLOOR	539.35	4	539.35	4	405.80	4	405.80	4	420.64	8	468.17	8	405.80	4	405.80	4	539.35	4	44	4130.06
4	3rd FLOOR	539.35	4	539.35	4	405.80	4	405.80	4	420.64	8	468.17	8	405.80	4	405.80	4	539.35	4	44	4130.06
5	4th FLOOR	539.35	4	539.35	4	405.80	4	405.80	4	420.64	8	468.17	8	405.80	4	405.80	4	539.35	4	44	4130.06
6	5th FLOOR	539.31	4	539.31	4	405.96	4	405.96	4	420.64	8	468.17	8	405.96	4	405.96	4	539.31	4	44	4130.58
7	6th FLOOR	539.31	4	539.31	4	405.96	4	405.96	4	420.64	8	468.17	8	405.96	4	405.96	4	539.31	4	44	4130.58
8	7th FLOOR	539.31	4	539.31	4	405.96	4	405.96	4	420.64	8	468.17	8	405.96	4	405.96	4	539.31	4	44	4130.58
9	8th FLOOR	539.31	4	539.31	4	405.96	4	405.96	4	420.64	8	468.17	8	405.96	4	405.96	4	539.31	4	44	4130.58
10	9th FLOOR	539.31	4	539.31	4	405.96	4	404.96	4	420.64	8	468.17	8	405.96	4	405.96	4	539.31	4	44	4129.58
11	10th FLOOR	539.35	4	539.35	4	405.80	4	405.80	4	420.64	8	468.17	8	405.80	4	405.80	4	539.35	4	44	4130.06
12	11th FLOOR	539.35	4	539.35	4	405.80	4	405.80	4	420.64	8	468.17	8	405.80	4	405.80	4	539.35	4	44	4130.06
13	12th FLOOR	404.51	3	539.35	4	405.80	4	405.80	4	420.64	8	468.17	8	405.80	4	405.80	4	539.35	4	43	3995.22
	12th FLOOR	134.84	1																	1	134.84
14	13th FLOOR	539.35	4	539.35	4	405.80	4	405.80	4	420.64	8	468.17	8	405.80	4	405.80	4	539.35	4	44	4130.06
15	14th FLOOR	539.35	4	539.35	4	405.80	4	405.80	4	420.64	8	468.17	8	405.80	4	405.80	4	539.35	4	44	4130.06
16	15th FLOOR	539.31	4	539.31	4	405.96	4	404.96	4	420.64	8	468.17	8	405.96	4	405.96	4	539.31	4	44	4129.58
17	16th FLOOR	539.31	4	539.31	4	405.96	4	404.96	4	420.64	8	468.17	8	405.96	4	405.96	4	539.31	4	44	4129.58
18	17th FLOOR	539.31	4	539.31	4	405.96	4	404.96	4	420.64	8	468.17	8	405.96	4	405.96	4	539.31	4	44	4129.58
19	18th FLOOR	539.31	4	539.31	4	405.96	4	404.96	4	420.64	8	468.17	8	405.96	4	405.96	4	539.31	4	44	4129.58
20	19th FLOOR	539.31	4	539.31	4	405.96	4	404.96	4	420.64	8	468.17	8	405.96	4	405.96	4	539.31	4	44	4129.58
21	20th FLOOR	539.35	4	539.35	4	405.80	4	404.88	4	420.64	8	468.17	8	405.80	4	405.80	4	539.35	4	44	4129.14
22	21st FLOOR	539.35	4	539.35	4	405.80	4	404.88	4	420.64	8	468.17	8	405.80	4	405.80	4	539.35	4	44	4129.14
23	22nd FLOOR	539.35	4	539.35	4	405.80	4	404.88	4	420.64	8	468.17	8	405.80	4	405.80	4	539.35	4	44	4129.14
24	23rd FLOOR	539.35	4	539.35	4	405.80	4	404.88	4	420.64	8	468.17	8	405.80	4	405.80	4	539.35	4	44	4129.14
25	24th FLOOR	539.35	4	539.35	4	405.80	4	404.88	4	420.64	8	468.17	8	405.80	4	405.80	4			40	3589.79
26	25th FLOOR	539.35	4	539.35	4															8	1078.70
27	26th FLOOR	539.35	4	539.35	4															8	1078.70
28	MUMTY FLOOR	61.99		61.99		62.98		62.98		82.86		82.86		62.98		62.98		61.99			603.61
29	M/C & WATER TANK	89.39		89.39		89.39		89.39		105.88		105.88		89.39		89.39		89.39			837.49
	TOTAL	14738.37		14738.38		10323.73		10314.52		10729.11		11916.27		10325.12		10323.73		13120.33		1110	106529.56

AMENITIES		
1	CONV. SHOPPING	1072.18
2	NURSING HOME	1300.00
3	NURSERY SCHOOL	850.00
4	MILK BOOTH	160.00
5	CLUB	717.82
6	SERVICE YARD	186.56
7	GUARD ROOM	36.82
	TOTAL (B)	4323.38

TOTAL FAR																					110852.94
A (5 per. /unit)	6901.45	51	11890.25	88	8953.96	88	10314.52	100	10729.11	199										526	48789.29
B (4.5 per. /unit)	7836.92	57	2848.13	20	1369.77	12					11916.27	199	10325.12	100	10323.73	100	13120.33	96	584		57740.27
AMENITIES																					4323.38
TOTAL	14738.37	108	14738.38	108	10323.73	100	10314.52	100	10729.11	199	11916.27	199	10325.12	100	10323.73	100	13120.33	96	1110		110852.94

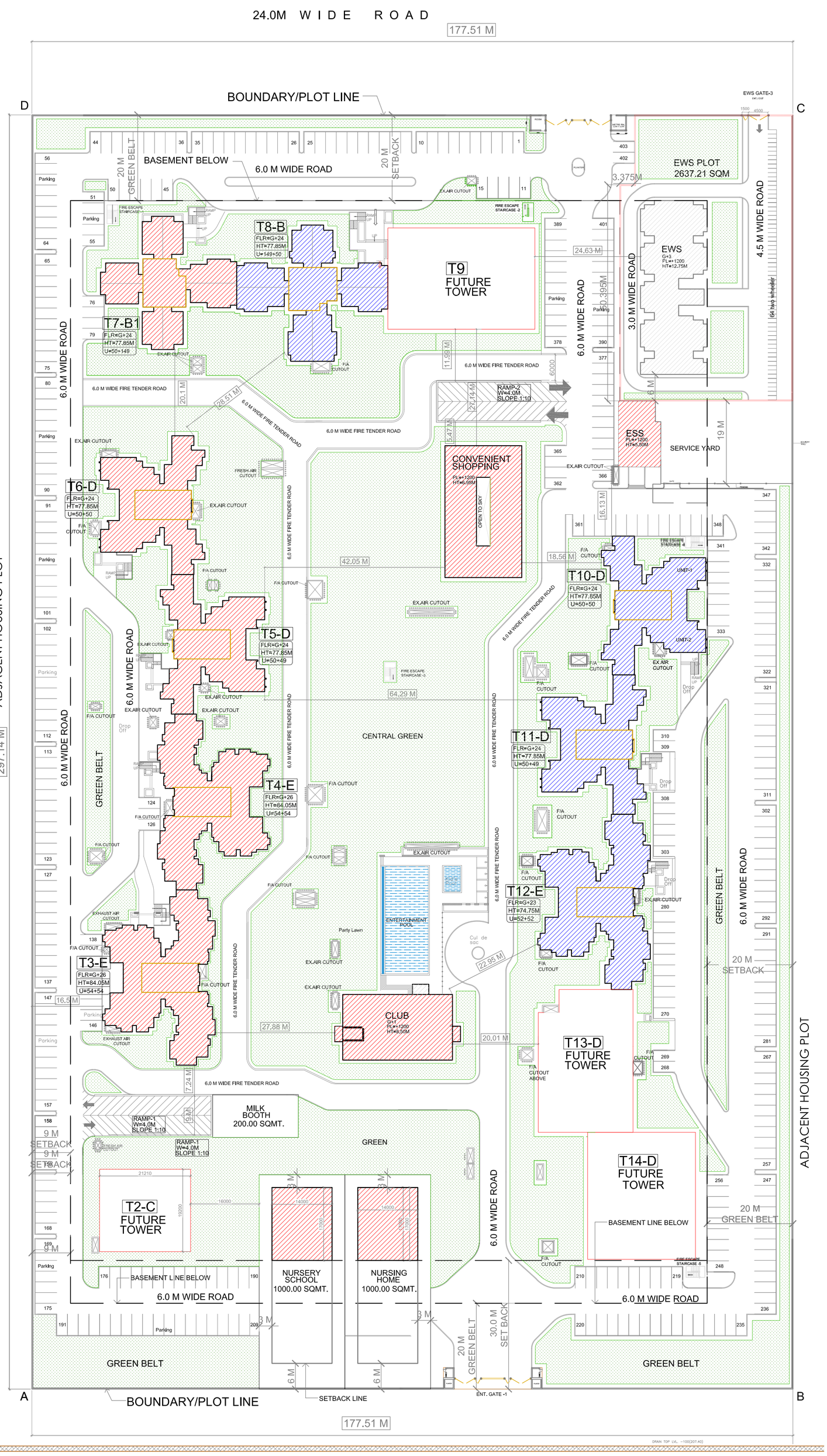

PHASE -I (AS/ TENDER)			
PLOT AREA	52744.18		SQM.
INFORMAL SECTOR (EWS)	2637.21		SQM.
NET PLOT AREA	**50106.97**		**SQM.**
PERMISSIBLE FAR @ 175	92302.32	175%	SQM.
PROPOSED FAR	**53112.67**	**100.70%**	**SQM.**
PERMISSIBLE GROUND COVERAGE @ 30	15032.091		SQM.
PROPOSED GROUND COVERAGE	3773.32		SQM.
DENSITY CALCULATION			
PERMISSIBLE DENSITY @ 525 PPH (5 PERSON/UNIT)	5.01697 x 525 / 5		
=	526.123		UNITS
SAY	**526**		**UNITS**
PROPOSED UNITS	**526**		**UNITS**

PHASE -II (PURCHASABLE)			
PLOT AREA	52744.18		SQM.
INFORMAL SECTOR (EWS)	2637.21		SQM.
NET PLOT AREA	**50106.97**		**SQM.**
PURCHASABLE FAR @ 175	92302.32	175%	SQM.
PROPOSED FAR (B+C+D)	57740.27		SQM.
TOTAL PROPOSED FAR	**57740.27**	**109.47%**	**SQM.**
PERMISSIBLE GROUND COVERAGE @ 30	15032.091		SQM.
PROPOSED GROUND COVERAGE	2063.41		SQM.
DENSITY CALCULATION			
PERMISSIBLE DESITY @ 525 PPH (4.5 PERSON/UNIT)	5.01697 x 525 / 4.5		
=	585.313		UNITS
SAY	**585**		**UNITS**
TOTAL PROPOSED UNITS	**584**		**UNITS**

EWS CALCULATION			
PLOT AREA		2637.21	SQM
GROUND COVERAGE@40%		1054.88	SQM
PERMISSIBLE FAR@160		4219.54	SQM
PROPOSED GROUND COVERAGE		538.46	SQM
PROPOSED FAR		2023.32	SQM
DENSITY CALCULATION			
PERMISSIBLE DENSITY @ 600PPH (2.5 PERSON/UNIT)		0.263721x600 / 2.5	
=		63.2	UNITS
SAY		**63**	**UNITS**
TOTAL PROPOSED UNITS		**64**	**UNITS**

CAR PARKING CALCULATION

TOTAL FAR ACHIEVED = 110852.94 SQ.MT.
ECS REQUIRED @ 65 SQM = 110852.94/65 ≈ 1705.43 ECS
SAY 1706 ECS
NO. OF CARS REQUIRED = 1706/2 ≈ 853 NOS.
NO. OF SCOOTERS REQUIRED = 853 NOS.

AREA REQUIRED FOR CAR PARK = 853 X 35 = 29855.00 SQ.MT..
AREA REQUIRED FOR SCOOTERS = 853 X 5 = 4265.00 SQ.MT.*

BASEMENT AREA = 36161.96 SQ.MT.

PARKING AREA = TOTAL AREA–(TOWER AREA+SERVICE AREA)
PARKING AREA = 36168.04 – 3565.40
= 32602.64 SQ.MT.

CARS PROVIDED IN BASEMENT = 28337.64/35 = 809 NOS.
CARS PROVIDED ON SURFACE = 403 NOS.
TOTAL CARS PROVIDED = 809+403 =1212 NOS.
*SCOOTER PARKING ASSUMED UNDER TOWER AREA IN BASEMENT.

CONV. SHOPPING CENTER CALCULATION		
PLOT AREA	2000.00	SQM
PERMISSIBLEGROUND COVERAGE @ 40%	800.00	SQM
PERMISSIBLE FAR @ 0.80	1600.00	SQM
PROPOSED GROUND COVERAGE	532.25	SQM
PROPOSED FAR	1072.18	SQM

NURSERY SCHOOL CALCULATION		
PLOT AREA	1000.00	SQM
PERMISSIBLEGROUND COVERAGE @ 40%	400.00	SQM
PERMISSIBLE FAR @ 0.85	850.00	SQM
PROPOSED GROUND COVERAGE	400.00	SQM
PROPOSED FAR	850.00	SQM

NURSING HOME CALCULATION		
PLOT AREA	1000.00	SQM
PERMISSIBLEGROUND COVERAGE @ 30%	300.00	SQM
PERMISSIBLE FAR @ 1.30	1300.00	SQM
PROPOSED GROUND COVERAGE	300.00	SQM
PROPOSED FAR	1300.00	SQM

MILK BOOTH CALCULATION		
PLOT AREA	200.00	SQM
PERMISSIBLEGROUND COVERAGE @ 30%	60.00	SQM
PERMISSIBLE FAR @ 0.80	160.00	SQM
PROPOSED GROUND COVERAGE	60.00	SQM
PROPOSED FAR	160.00	SQM

GROUND COVERAGE CALCULATION AS PER PERMISSIBLE

TOWER - GROUND COVERAGE

S.NO	TOWER NAME	TOWER TYPE	GROUND COVERAGE
1	T3	E	608.82
2	T4	E	606.92
3	T5	D	462.12
4	T6	D	462.12
5	T7	B1	473.87
		TOTAL (A)	2613.85

AMENITIES		
1	CONV. SHOPPING	536.09
2	CLUB	400.00
3	NURSING HOME	300.00
4	NURSERY SCHOOL	400.00
5	MILK BOOTH	60.00
6	SERVICE YARD	186.56
7	GUARD ROOM	36.82
	TOTAL (B)	1919.47

GROUND COVERAGE CALCULATION AS PER PURCHASABLE

TOWER - GROUND COVERAGE

1	T8	B	532.25
2	T10	D	462.12
3	T11	D	462.12
4	T12	E	606.92
		TOTAL (C)	2063.41
EWS			
PROPOSED GROUND COVERAGE(D			538.46
TOTAL GROUND COVERAGE (A+B+C+D)			7135.19

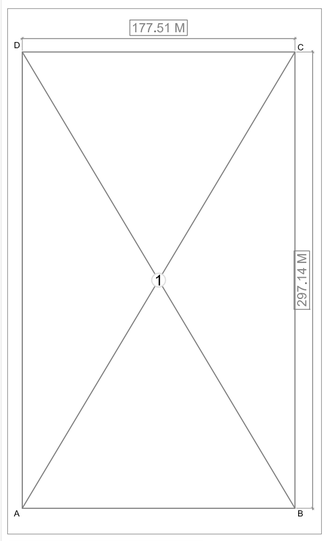

SITE AREA CALCULATION
177.51 X 297.14 =
52744.18 SQM
= 13.03 ACRES
= 5.274 HECTARES

TOTAL PLOT AREA	52744.18	SQMT.	5.274Hac	
GROUP HOUSING PLOT AREA	50106.97	SQMT.		
CONV. SHOPPING PLOT AREA	2000.00	SQMT.		
NURSERY SCHOOL PLOT AREA	1000.00	SQMT.		
MILK BOOTH	200.00	SQMT.		
NURSING HOME PLOT AREA	1000.00	SQMT.		

AREA CHART SUMMARY AS PER PERMISSIBLE FAR @ 175

	PERMISSIBLE	PROPOSED GROUP HOSING	PROPOSED EWS	PROPOSED AMENITIES FAR	TOTAL PROPOSED FAR
TOTAL MAIN FAR	92302.32	48789.29	2023.32	4323.38	55135.99
	@ 175	92.50%	3.84%	8.20%	104.53%
TOTAL GROUND COVERAGE	15823.25	2613.85	538.46	1919.47	5071.78
	@30%	4.96%	1.02%	3.64%	9.62%

AREA CHART SUMMARY AS PER PURCHASABLE FAR @ 175

	PERMISSIBLE FAR	GROUP HOSING FAR	PROPOSED EWS	PROPOSED AMENITIES FAR	TOTAL PROPOSED FAR
TOTAL MAIN FAR	92302.32	57740.27			57740.27
	@ 175	109.47%			109.47%
TOTAL GROUND COVERAGE	15823.25	2063.41			2063.41
	@30%	3.91%			3.91%

EWS PLOT AREA

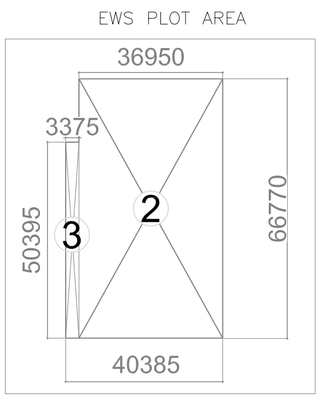

EWS SITE AREA CALCULATION
= 2 + 3
= (36.95 X 66.77) + (3.375 X 50.4)
= 2467.15 + 170.1 = 2637.25sqm
= 0.65 ACRES

PERMISSIBLE FAR /DENSITY	
PERMISSIBLE FAR AS/ TENDER DOCUMENT	175
PERMISSIBLE FAR AS/ PURCHASABLE	175
TOTAL PERMISSIBLE FAR	350
PERM. DENSITY AS/ TENDER DOCUMENT	525 PPH
PROP. DENSITY AS/ TENDER DOCUMENT	525 PPH
PERM. DENSITY AS/ PURCHASABLE	525 PPH
PROP. DENSITY AS/ PURCHASABLE	518.31PPH
TOTAL PERM. DENSITY	1050 PPH
TOTAL PROPOSED DENSITY	1043.31PPH

ELECTRICAL LOAD DETAIL		
S.NO.	DESCRIPTION	TOTAL LOAD (In KW)
1.	TOTAL LOAD OF FLATS	3370.00
2.	TOTAL LOAD OF COMMON AREAS	1830.00
3	TOTAL LOAD OF FIRE FIGHTING	300.00
	GRAND TOTAL LOAD OF COMPLEX	5500.00

SUBMISSION DRAWING

drg. title: SITE PLAN

project: PROPOSED CONSTRUCTION OF MULTI STOREYED GROUP HOUSING AT SECTOR ETA-II, Plot No.=GH-01,GREATER NOIDA

developers: ansal API
ANSAL PROPERTIES & INFRASTRUCTURE Ltd.
115, ANSAL BHAWAN,
16, KASTURBA GANDHI MARG,
NEW DELHI – 110 001.

architects: SAA sikka associates architects
• architecture • masterplanning • urban design • interior desiging • project management
B2/20 safdarjang enclave, new delhi-110029 tel:(+91-11)26107053,26108355 26177549 fax: 26194481, e-mail: saa@saaindia.net, sikka@hathway.com

Architect | Owner

drg. no: S. NO.-01 | A- SP-01
scale: 1:500
date:16-08-2016
dealt: