PRODUCED BY AN AUTODESK EDUCATIONAL PRODUCT

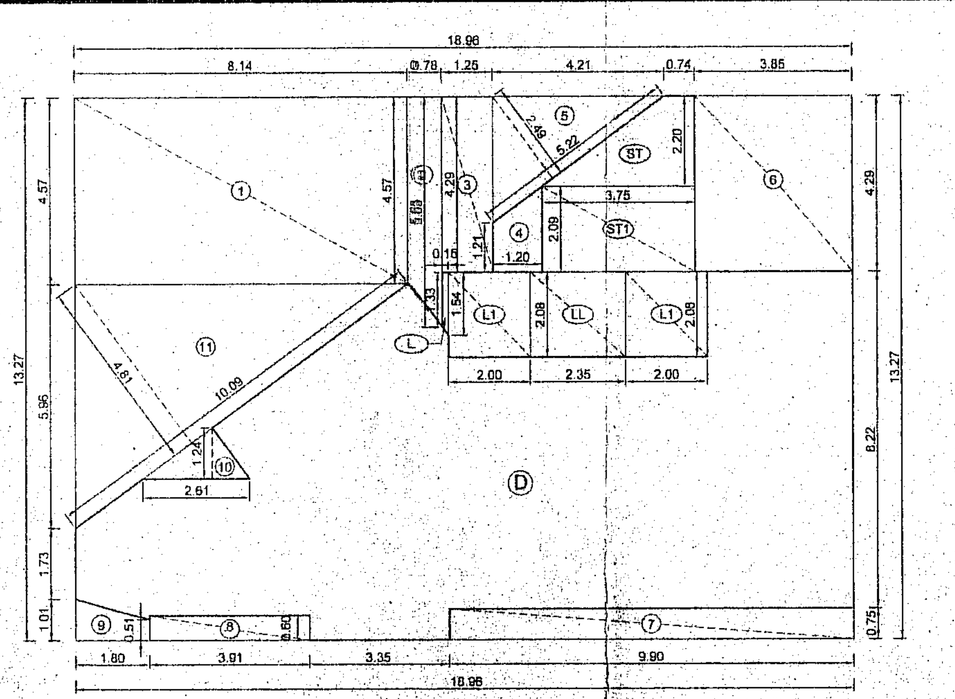

BUILT UP LINE AREA DIAGRAM (1ST TO 3RD FLOOR)
SCALE = 1:100

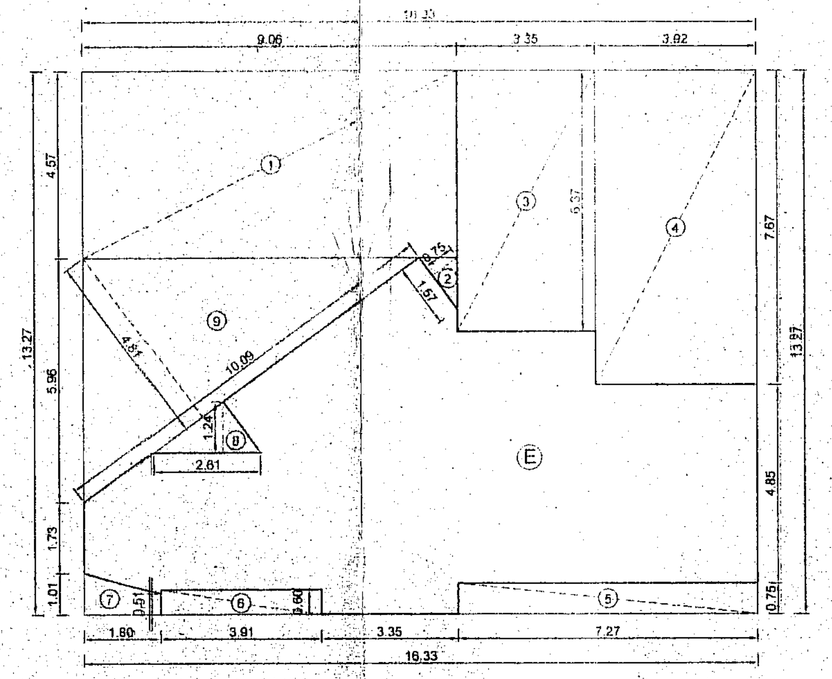

BUILT UP LINE AREA DIAGRAM (4TH FLOOR)
SCALE = 1:100

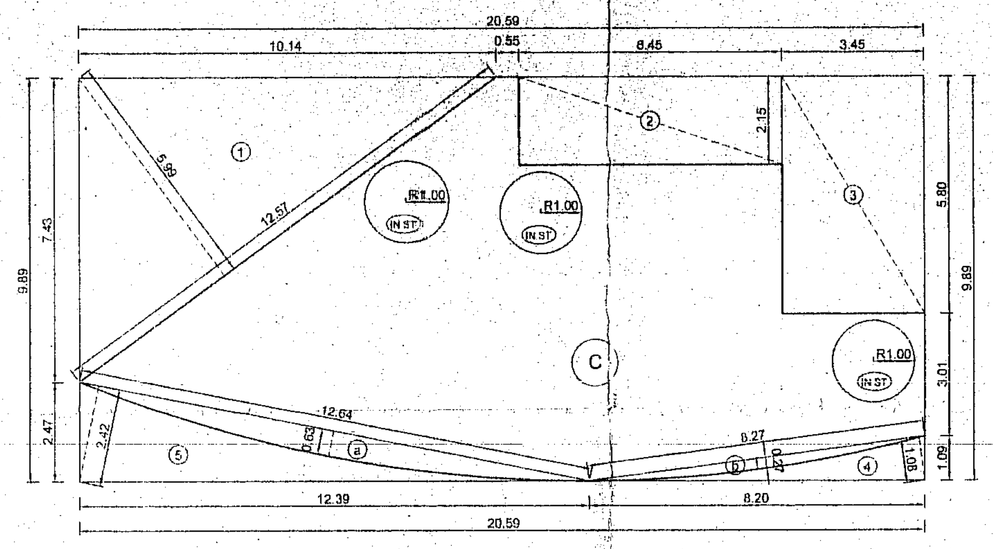

BUILT UP LINE AREA DIAGRAM (GROUND FLOOR)
SCALE = 1:100

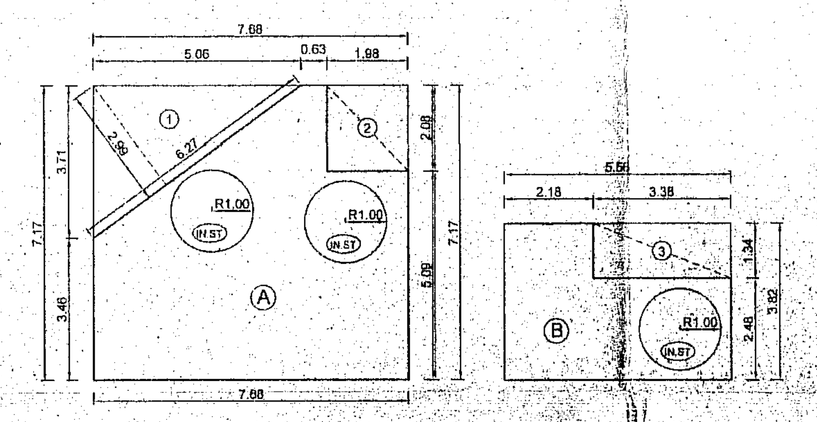

BUILT UP LINE AREA DIAGRAM (BASEMENT FLOOR)
SCALE = 1:100

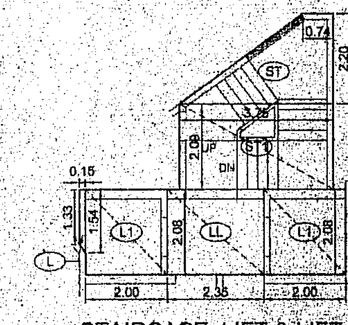

STAIRCASE, LIFT & LIFT LOBBY
LINE AREA DIAGRAM (1ST TO 3RD FLOOR)
SCALE = 1:100

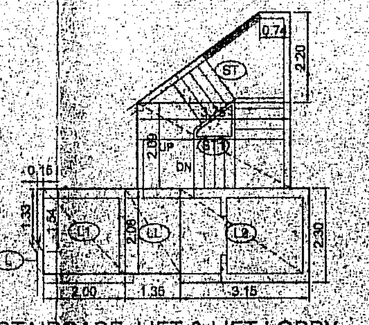

STAIRCASE, LIFT & LIFT LOBBY
LINE AREA DIAGRAM (4TH FLOOR)
SCALE = 1:100

INTERNAL STAIRCASE,
LINE AREA DIAGRAM
SCALE = 1:100 (GROUND FLOOR)

BUILT UP AREA CALCULATION

GROUND FLOOR								
ADDITION								
C)	20.59	X	9.89	X	1 NO.	=	203.64	SQ.MT.
a)	12.64	X	0.83	X	0.60	=	6.34	SQ.MT.
b)	8.27	X	0.27	X	0.60	=	1.50	SQ.MT.
TOTAL ADDITION						=	210.48	SQ.MT.
DEDUCTIONS								
1)	12.67	X	5.99	X	0.50	=	37.85	SQ.MT.
2)	6.45	X	2.15	X	1 NO.	=	13.87	SQ.MT.
3)	3.45	X	5.80	X	1 NO.	=	20.01	SQ.MT.
4)	8.27	X	1.08	X	0.50	=	4.47	SQ.MT.
5)	12.64	X	2.42	X	0.50	=	15.29	SQ.MT.
TOTAL DEDUCTIONS						=	91.29	SQ.MT.
NET BUILT UP AREA						=	119.19	SQ.MT.

INTERNAL STAIRCASE, GROUND FLOOR								
DEDUCTIONS								
In st.)	1.00	X	1.00	X	3.14	X 3 NOs.	=	9.42 SQ.MT
TOTAL DEDUCTIONS							=	9.42 SQ.MT
TOTAIL NET BUILT UP AREA							=	109.77 SQ.MT

BUILT UP AREA CALCULATION

BASEMENT FLOOR								
ADDITION								
A)	7.68	X	7.17	X	1 NO.	=	55.07	SQ.MT.
B)	5.66	X	3.82	X	1 NO.	=	21.24	SQ.MT.
TOTAIL ADDITION						=	76.31	SQ.MT.
DEDUCTIONS								
1)	6.27	X	2.99	X	0.50	=	9.37	SQ.MT.
2)	1.98	X	2.08	X	1 NO.	=	4.12	SQ.MT
3)	3.38	X	1.34	X	1 NO.	=	4.53	SQ.MT.
TOTAL DEDUCTIONS						=	18.02	SQ.MT.
NET BUILT UP AREA						=	58.29	SQ.MT

INTERNAL STAIRCASE, BASEMENT FLOOR								
DEDUCTIONS								
In st.)	1.00	X	1.00	X	3.14	X 3 NOs.	=	9.42 SQ.MT.
TOTAL DEDUCTIONS							=	9.42 SQ.MT.
TOTAL NET BUILT UP AREA							=	48.87 SQ.MT.

BUILT UP AREA CALCULATION

1ST TO 3RD FLOOR								
ADDITION								
D)	18.98	X	13.27	X	1 NO.	=	251.60	SQ.MT.
TOTAL ADDITION						=	251.60	SQ.MT.
DEDUCTIONS								
1)	8.14	X	4.57	X	1 NO.	=	37.20	SQ.MT.
2)	(4.57 + 5.63)	X	0.78	X	0.50	=	3.98	SQ.MT.
3)	1.25	X	4.29	X	1 NO.	=	5.36	SQ.MT.
4)	(1.21 + 2.09)	X	1.20	X	0.50	=	1.98	SQ.MT.
5)	5.22	X	2.49	X	0.50	=	6.50	SQ.MT.
6)	3.85	X	4.29	X	1 NO.	=	16.52	SQ.MT.
7)	9.90	X	0.75	X	1 NO.	=	7.43	SQ.MT.
8)	3.91	X	0.60	X	1 NO.	=	2.35	SQ.MT.
9)	(1.01 + 0.51)	X	1.80	X	0.50	=	1.37	SQ.MT.
10)	2.61	X	1.24	X	0.50	=	1.62	SQ.MT.
11)	10.09	X	4.81	X	0.50	=	24.27	SQ.MT.
TOTAL DEDUCTIONS						=	108.58	SQ.MT.
NET BUILT UP AREA						=	143.02	SQ.MT.

STAIRCASE, LIFT & LIFT LOBBY 1ST TO 3RD FLOOR								
DEDUCTIONS								
ST)	(3.75 + 0.74)	X	2.20	X	0.50	=	4.94	SQ.MT.
ST1)	3.75	X	2.09	X	1 NO.	=	7.84	SQ.MT.
L)	(1.33 + 1.54)	X	0.15	X	0.50	=	0.22	SQ.MT.
L1)	2.00	X	2.08	X	2 NOs.	=	8.32	SQ.MT.
LL)	2.35	X	2.08	X	1 NO.	=	4.89	SQ.MT.
TOTAL DEDUCTIONS						=	26.21	SQ.MT.
TOTAL NET BUILT UP AREA						=	116.81	SQ.MT

BUILT UP AREA CALCULATION

4TH FLOOR								
ADDITION								
E)	16.33	X	13.27	X	1 NO.	=	216.70	SQ.MT.
TOTAL ADDITION						=	216.70	SQ.MT.
DEDUCTIONS								
1)	9.06	X	4.57	X	1 NO.	=	41.40	SQ.MT.
2)	1.57	X	0.75	X	0.50	=	0.59	SQ.MT.
3)	3.35	X	6.37	X	1 NO.	=	21.34	SQ.MT.
4)	3.92	X	7.67	X	1 NO.	=	30.07	SQ.MT.
5)	7.27	X	0.75	X	1 NO.	=	5.45	SQ.MT.
6)	3.91	X	0.60	X	1 NO.	=	2.35	SQ.MT.
7)	(1.01 + 0.51)	X	1.80	X	0.50	=	1.37	SQ.MT.
8)	2.61	X	1.24	X	0.50	=	1.62	SQ.MT.
9)	10.09	X	4.81	X	0.50	=	24.27	SQ.MT.
TOTAL DEDUCTIONS						=	128.40	SQ.MT.
TOTAL NET BUILT UP AREA						=	88.24	SQ.MT.

24 NOV 2014

APPROVED Subject to conditions mentioned in this Office No. CHE/WS/2682 /MBP/342(NEW) of

Executive Engineer Building Prop. W. S. ('H') Ward
Mumbai Municipal Corporation

S.E.B.P.(H/W)

CARPET AREA CALCULATIONS

FLAT NO.	ROOM								CARPET AREA (IN SQ. MT.s)
1	LIV	=	3.20	X	5.77	=	18.46		42.99 SQ. MT. 03 FLOOR X 1 No. = 03 NOs. (1ST TO 3RD FLOOR)
	KIT	=	3.25	X	2.25	=	7.31		
	BED	=	3.05	X	3.20	=	9.76		
	TOIL	=	2.00	X	1.20	=	2.40		
	TOIL	=	2.00	X	1.02	=	2.04		
	PASS	=	2.67	X	0.90	=	2.40		
	DJ	=				=	0.62		
2	LIV	=	3.20	X	5.77	=	18.46		60.97 SQ. MT. 03 FLOOR X 1 No. = 03 NOs. (1ST TO 3RD FLOOR)
	KIT	=	3.09	X	1.37	=	4.23		
		=	3.09	X	2.54	X 0.50 =	3.92		
	BED	=	3.05	X	3.65	=	11.13		
	BED	=	3.91	X	3.05	=	11.92		
	TOIL	=	1.50	X	2.31	=	3.46		
	TOIL	=	2.40	X	1.20	=	2.88		
			(0.49 + 0.53)	X	0.22	X 0.50 =	0.11		
	PASS	=	2.31	X	0.90	=	2.08		
			(0.46 + 1.54)	X	1.48	X 0.50 =	1.48		
			(0.90 + 1.54)	X	0.47	X 0.50 =	0.57		
	DJ	=				=	0.73		
2	LIV/DIN	=	7.12	X	4.55	=	32.40		78.81 SQ. MT. 01 FLOOR X 1 No. = 01 NOs. (4TH FLOOR)
		=	3.20	X	1.22	=	3.90		
	KIT	=	3.09	X	1.37	=	4.23		
		=	3.09	X	2.54	X 0.50 =	3.92		
	BED	=	3.05	X	3.65	=	11.13		
	BED	=	3.91	X	3.05	=	11.92		
	TOIL	=	1.50	X	2.31	=	3.46		
	TOIL	=	2.40	X	1.20	=	2.88		
			(0.49 + 0.53)	X	0.22	X 0.50 =	0.11		
	PASS	=	2.31	X	0.90	=	2.08		
			(0.46 + 1.54)	X	1.48	X 0.50 =	1.48		
			(0.90 + 1.54)	X	0.47	X 0.50 =	0.57		
	DJ	=	1.00	X	0.22	X 1 No. =	0.73		
	TOTAL NOS. OF FLATS					=	07.00 NOS.		

AS PER OLD DCR. RULES

CAR PARKING STATEMENT

CARPET AREA IN SQ. MTS.	TOTAL NO. OF FLATS	PARKING PERMISSIBLE AS PER D.C. RULES	PARKING REQUIRED
BELOW 35.00	NIL	1 PARKING / 4 TENEMENTS	NIL
35.00 TO 45.00	03.00	1 PARKING / 2 TENEMENTS	01.50
45.00 TO 70.00	03.00	1 PARKING / 1 TENEMENTS	03.00
ABOVE 70.00	01.00	2 PARKING / 1 TENEMENTS	02.00
SHOP CARPET AREA = BASEMENT & GROUND FLOOR = 181.63 SQ. MT.		1 PARKING FOR 40.00 SQ.MT.	04.54
TOTAL PARKING	07.00 NOs.		11.04
25 % ADDITIONAL PARKING FOR VISITORS			02.76
TOTAL PARKING REQUIRED			13.80
TOTAL PARKING REQUIRED		= 14.00 NOs.	
TOTAL PARKING PROVIDED		= 19.00 NOs.	

AS PER NEW DCR. RULES PROPOSED PARKING

CAR PARKING STATEMENT

CARPET AREA IN SQ. MT.S	TOTAL NO. OF FLATS	PARKING PERMISSIBLE AS PER D.C. RULES	PARKING REQUIRED
BELOW 45.00	03.00	1 PARKING / 4 TENEMENTS	01.00
45.00 TO 60.00	NIL	1 PARKING / 2 TENEMENTS	NIL
60.00 TO 90.00	04.00	1 PARKING / 1 TENEMENTS	04.00
ABOVE 90.00	NIL	2 PARKING / 1 TENEMENTS	NIL
SHOP CARPET AREA = BASEMENT & GROUND FLOOR = 181.63 SQ. MT.		1 PARKING FOR 40.00 SQ.MT.	04.54
TOTAL PARKING	07.00 NOs.		09.54
25 % ADDITIONAL PARKING FOR VISITORS			02.39
TOTAL PARKING REQUIRED			11.93
TOTAL PARKING REQUIRED		= 12.00 NOs.	
TOTAL PARKING PROVIDED		= 19.00 NOs	

STAIRCASE,LIFT & LOBBY AREA CALCUL

1ST TO 3RD FLOOR								
ADDITIONS								
ST)	(3.75 + 0.74)	X	2.20	X	0.50	=	4.94	SQ.MT
ST1)	3.75	X	2.09	X	1 NO.	=	7.84	SQ.MT
L)	(1.33 + 1.54)	X	0.15	X	0.50	=	0.22	SQ.MT
L1)	2.00	X	2.08	X	2 NOs.	=	8.32	SQ.MT
LL)	2.35	X	2.08	X	1 NO.	=	4.89	SQ.MT
TOTAL ADDITIONS						=	26.21	SQ.MT
						=	26.21	SQ.MT
						=	X 3 FLOOR	
TOTAL AREA						=	78.63	SQ.MT.
4TH FLOOR								
ADDITIONS								
ST)	(3.75 + 0.74)	X	2.20	X	0.50	=	4.94	SQ.MT
ST1)	3.75	X	2.09	X	1 NO.	=	7.84	SQ.MT
L)	(1.33 + 1.54)	X	0.15	X	0.50	=	0.22	SQ.MT
L1)	2.00	X	2.08	X	1 NO.	=	4.16	SQ.MT.
LL)	1.35	X	2.08	X	1 NO.	=	2.81	SQ.MT.
L2)	3.15	X	2.30	X	1 NO.	=	7.25	SQ.MT.
TOTAL ADDITIONS						=	27.22	SQ.MT.
GROUND FLOOR (INTERNAL STAIRCASE)								
ADDITIONS								
In st.)	1.00	X	1.00	X	3.14	X 3 NOs.	=	9.42 SQ.MT
TOTAL ADDITIONS							=	9.42 SQ.MT.
TOTAL AREA							=	115.27 SQ.MT.
TOTAL NET PREMIUM AREA							=	115.27 SQ.MT

SUMMARY (COMMERCIAL)

FLOOR	TOTAL AREA
BASEMENT	109.77
GROUND	48.87
TOTAL	158.64
TOTAL NET BUILT UP AREA PROPOSED	158.64 SQ.MT.

SUMMARY (RESIDENTIAL)

FLOOR	TOTAL AREA
FIRST	116.81
SECOND	116.81
THIRD	116.81
FOURTH	88.24
TOTAL	438.67
TOTAL NET BUILT UP AREA PROPOSED	= 438.67 SQ.MT.
(COMMERCIAL + RESIDENTIAL)	= 158.64 + 438.67
TOTAL NET BUILT UP AREA PROPOSED	= 597.31 SQ.MT

CERTIFICATE OF PLOT AREA

CERTIFIED THAT I HAVE SURVEYED THE PLOT UNDER REFERENCE ON DT. AND THAT THE DIMENSIONS OF THE SIDES, ETC. OF THE PLOT STATED ON THE PLAN ARE AS MEASURED ON SITE AND THE AREA SO WORKED OUT IS SQ. MTS. AND TALLIES WITH THE AREA STATED IN THE DOCUMENT OF OWNERSHIP \ PROPERTY REGISTER CARD.

SIGNATURE OF ARCHITECT

PROFORMA - B

DESCRIPTION OF PROPOSAL AND PROPERTY

PROPOSED COMMERCIAL & RESIDENTIAL BUILDING ON PLOT BEARING C.T.S. NO. 843 OF VILLAGE BANDRA AT CHITRAKAR DHURANDHAR ROAD, BANDRA (WEST) MUMBAI.

NAME OF OWNER : "NARANG AND MAHAVIR DEVELOPERS LLP"

JOB No.	DRG. No.	CHECKED BY	DESIGN & DRN. BY	DATE
	2		VASEEM KHAN	

NORTH

NAME, ADD. & SIGNATURE OF ARCHITECT

TR/AB-36 BHAILI C/ 292
LICENCE NO. CHE/P/ 29/ 2000
SQUARE CONSULTANTS
architects & engineers
103, Shyam Kamal, C - Bldg., Agrawal Market,
Off. Tejpal Road, Vile Parle (E) NOV 2014 Mumbai - 400 057.

STAMP OF RECEIPT OF PLAN

STAMP OF APPROVAL OF PLAN

महानगरपालिका अभियंता कार्यालय
प्रस्ताव (सीमांक उपविभाग)

CHE / 2682 / WS / AH (NEW) 2

CONTENTS OF SHEET : BUILT UP LINE AREA DIAGRAM & CALCULATIONS , CARPET AREA , WITH SUMMARY

IN CASE OF PLOTS / LAYOUT WHERE EARLIER B.U.A. APPROVED AS PER I.O.D. ISSUSED IS PROPOSED TO BE RETAINED AND FOR BALANCE POTENTIAL IN THE PLOT / LAYOUT IS PROPOSED AS PER THE D.C. REGULATION AMENDED ON 8.01.212

PROFORMA - A

		PLAN AS PER DCR AMENDED AFTER 08 - 01 - 2012
A)	AREA STATEMENT	SQ. MTS.
1)	AREA OF PLOT	472.40
2)	DEDUCTIONS FOR a) ROAD SET-BACK AREA b) PROPOSED ROAD c) ANY RESERVATION (SUB-PLOT) d) --- % AMENITY SPACE AS PER DCR 56 / 57 (SUB - PLOT) OTHER	73.55
3)	BALANCE AREA OF PLOT (1 MINUS 2)	398.85
4)	DEDUCTION FOR 15 % RECREATIONAL GROUND / 10% AMENITY SPACE (IF DEDUCTIBLE FOR IND)	----------
5)	NET AREA OF PLOT (3 MINUS 4)	398.85
6)	ADDITIONS FOR FLOOR SPACE INDEX 2 (a) 100% FOR D.P. ROAD (RESTRICTED TO 40% OR 80% OF NET PLOT AREA) 2 (b) 100% FOR SET BACK (RESTRICTED TO 40% OR 80% OF NET PLOT AREA)	73.55
7)	TOTAL AREA (5 PLUS 6)	472.40
8)	FLOOR SPACE INDEX PERMISSIBLE	1.00
9)	9 (a) FLOOR SPACE INDEX CREDIT AVAILABLE BY DEVELOPMENT RIGHTS 9 (b) ADDITION IN LIEU OF T.D.R.	----------
	ADDITIONS FOR FLOOR SPACE INDEX 9 (b) 0.33 F.S.I. AS PER DCR 32 9 (c) % AS PER DCR 33 ( ) OTHER	125.30
10)	PERMISSIBLE FLOOR AREA (7 x 8) PLUS 9 ABOVE	597.70
11)	EXISTING BUILT UP AREA	----------
12)	PROPOSED BUILT UP AREA	597.31
13)	EXCESS BALCONY AREA TAKEN IN FLOOR SPACE INDEX	N.A.
14)	TOTAL BUILT UP AREA PROPOSED (11 + 12 + 13)	597.31
15)	FSI CONSUMED ON NET HOLDING = 14 / 3	1.497
B)	DETAILS OF RESIDENTIAL / NON RESIDENTIAL AREA	
1)	PURELY RESIDENTIAL BUILT UP AREA	------
2)	REMAINING NON-RESIDENTIAL BUILT UP AREA	------
C)	DETAILS OF FSI AVAILED AS PER DCR 35 (4)	
1)	FUNGIBLE BUILT UP AREA COMPONENT PROPOSED VIDE DCR 35 (4) FOR PURELY RESIDENTIAL = OR <.(B1 x 0.35)	------
2)	FUNGIBLE BUILT UP AREA COMPONENT PROPOSED VIDE DCR 35 (4) FOR NON RESIDENTIAL = OR <.(B2 x 0.20)	------
3)	TOTAL FUNGIBLE BUILT UP AREA VIDE DCR 35 (4) = (C1 + C2)	------
4)	TOTAL GROSS BUILT UP AREA PROPOSED (14 + C3)	------
D)	TENEMENT STATEMENT	
	i) PROPOSED AREA (ITEM B4 ABOVE)	597.31
	ii) LESS DEDUCTION OF NON RESIDENTIAL AREA (SHOP ETC)	158.64
	iii) AREA AVAILABLE FOR TENEMENTS (i) MINUS (ii))	438.67
	iv) TENEMENTS PERMISSIBLE (DENSITY OF TENEMENTS / HECTARE)	19.74
	v) TENEMENTS PROPOSED	07.00
	vi) TENEMENTS EXISTING	----------
	TOTAL TENEMENTS ON THE PLOT	
E)	PARKING STATEMENT	
	i) PARKING REQUIRED BY REGULATIONS FOR CAR SCOOETR / MOTOR / CYCLE OUTSIDERS (VISITORS)	11.04 / 02.76
	ii) COVERED GARAGE PERMISSIBLE	
	iii) COVERED GARAGES PROPOSED CAR SCOOETR / MOTOR / CYCLE OUTSIDERS (VISITORS)	
	TOTAL PARKING REQUIRED	14.00
	TOTAL PARKING PROVIDED	19.00
F)	TRANSPORT VEHICLES PARKING	
	i) SPACES FOR TRANSPORT VEHICLES PARKING REQUIRED BY REGULATIONS	----------
	ii) TOTAL NO. OF TRANSPORT VEHICLES PARKING SPACES PROVIDED	----------

	SQ.MT.	LAND SDRRR	RECEIPT NO.	AMOUNT
F.S.I. OF BUILT UP AREA REHABILITATION COMPONENT FOR PURELY RESIDENTIAL IN EXISTING STRUCTURE/S	------			
F.S.I. OF BUILT UP AREA REHABILITATION COMPONENT FOR PURELY NON-RESIDENTIAL IN EXISTING STRUCTURE/S	NIL			
TOTAL BUILT UP AREA OF EXISTING STRUCTURE/S PROPOSED TO BE RE-ACCOMMODATED (= 19A + 19B)	------			
MAXIMUM FUNGIBLE BUILT UP AREA COMPONENT REHABILITATION BUILT UP AREA COMPONENT = (19A x 0.35 + 19B x 0.20)	------			
FUNGIBLE BUILT UP AREA CONSUMED FOR REHABILITATION COMPONENT OF PURELY RESIDENTIAL USE	------	NIL	NA	
FUNGIBLE BUILT UP AREA CONSUMED FOR REHABILITATION COMPONENT OF PURELY NON-RESIDENTIAL USE	NIL	NIL	NA	
TOTAL FUNGIBLE BUA CONSUMED FRO REHABILITATION COMPONENT	------	NIL	NA	
20% = OR < 0.35				
PREMIUM TO BE PAID FOR FUNGIBLE BUA FOR PURELY RESIDENTIAL EXCLUDING REHAB = 0.60 x SDR RATE ON THE DATE OF PAYMENT x (15A - 20A)	------			
PREMIUM TO BE PAID FOR FUNGIBLE BUA FOR PURELY COMMERCIAL EXCLUDING REHAB = 1.0 x SDR RATE ON THE DATE OF PAYMENT x (15B - 20B)	NIL			

PREMIUM FOR 0.33% FSI FOR MCGM RS. 16,00,110 /= R. NO. 100169190 DT. 16.10.14
PREMIUM FOR 0.33% FSI FOR GOVT. RS. 10,90,110 /= R. NO. 040687 DT. 21.10.14

PRODUCED BY AN AUTODESK EDUCATIONAL PRODUCT
PRODUCED BY AN AUTODESK EDUCATIONAL PRODUCT
PRODUCED BY AN AUTODESK EDUCATIONAL PRODUCT