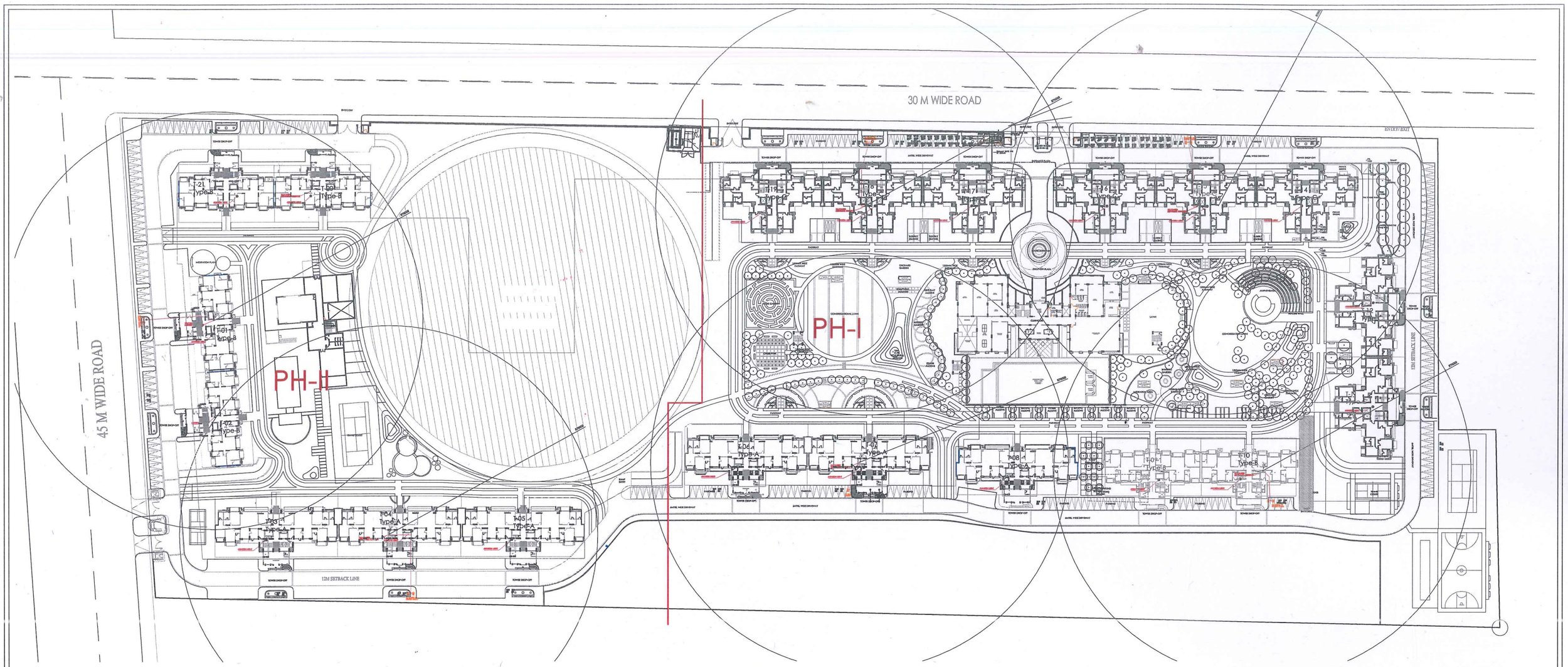

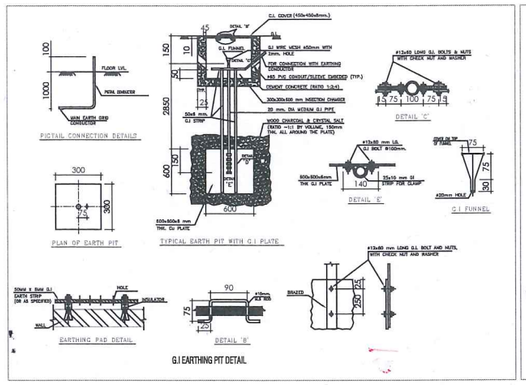

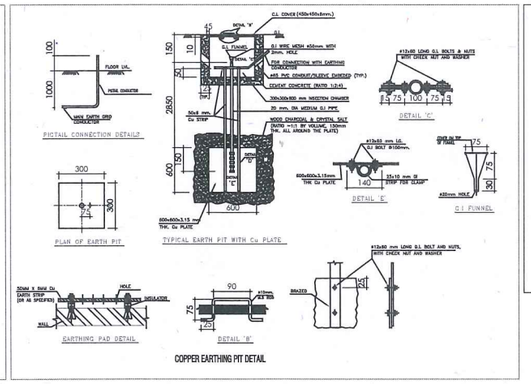

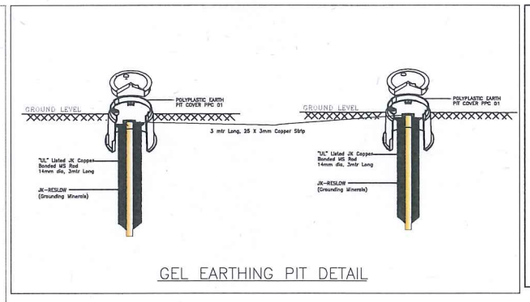

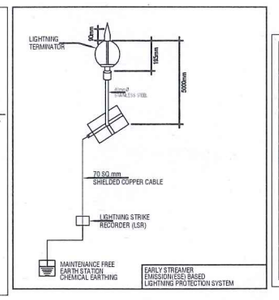

ELECTRICAL LEGEND

SYMBOL	DESCRIPTION
G.I	G.I. EARTHING PIT
C.U	C.U. EARTHING PIT
GEL	GEL/CHEMICAL EARTHING PIT
	LIGHTING ARRESTOR
	70SQmm CU.CONDUCTOR SHIELDED CABLE
	AVIATION LIGHT

SYM.	DESCRIPTION
	1X28W WALL MOUNTED T5 TUBE LIGHT
	6A ONE WAY SWITCH BOARD
	16A,3/6P IN SOCKET WITH 16A SWTCH
	EXHAUST FAN
	POINT FOR EXHAUST

PROJECT :

ATS LE GRANDIOSE
SECTOR-150
NOIDA

ELECTRICAL SITE PLAN